Enriching Lives

ILLUSTRATED SPARE PART LIST
FOR

DV10 ENGINE
FOR POWER GENERATION
A/C – EXPORT

APPLICATION CODE NO.
DV0.5060

KIRLOSKAR OIL ENGINES LIMITED
Regd. Office: Laxmanrao Kirloskar Road, Khadki, Pune - 411 003, (India).
Tel.: +91 (20) 2581 0341, 2581 5341. Fax: +91 (20) 2581 3208, 2581 0209.
Website: www.koel.co.in

JUNE -2015 PUBLICATION NO. DV0.066.06.0.00-REV.02

GROUP INDEX
APPLICATION CODE DV0.5060

SR.NO.	DESCRIPTION	GROUP NO.	QTY.	PAGE NO.
1	ADAPTOR (M22 X 1.5 - M18 X 1.5)	DV0.507.04	2	5
2	AIR CLEANER AND MOUNTING	DV0.505.1	1	6 TO 8
3	AIR CLEANER BRACKET FOR DV10 EXPORT GENSET	DV0.035.18	1	9
4	ANTI VIBRATION MOUNTS FOR DV SERIES	DV0.061.2	1	10
5	ASSEMBLY OF BASE PLATE & FUEL TANK FOR 500 KVA DV10 EXPORT SET (COMPACT)	DV0.225.2	1	11 TO 14
6	BATTERY CABLE 70 SQ.MM WITH SUITABLE LUG AND .LENGTH RED CABLE 500MM & BLACK CABLE 500 MM.	DV0.907	1	15
7	BATTERY CLAMP FOR DV SERIES	DV0.902.4	1	16
8	BREATHER AND MOUNTING	DV0.046	1	17, 18
9	BREATHER PIPE ASSELY FOR DOUBLE BREATHER	DV0.054.2	1	19
10	CAC PIPES & FASTNERS	DV0.033.2	1	20
11	CAC PIPING	DV0.033	1	21, 22
12	CAMSHAFT	DV0.004	1	23, 24
13	CANOPY FOR 500 KVA DV10 EXPORT SET(COMPACT)	DV0.225.1	1	25, 26
14	CANOPY WIRING HANRESS FOR 500KVA MODIFIED CANOPY , DV10 GENSET(S/F DEEP SEA 7320 UNIT)	DV0.901.2	1	27
15	CETRIFUGAL FITER AD ASSLY.	DV0.041	1	28, 29
16	CONNECTING ROD	DV0.005	10	30
17	CONTROL PANEL 500 KVA 3PH.380/415 V WITH DSE 7420 CONTROL UNIT	DV0.850.5	1	31 TO 39
18	CRANK CASE	DV0.001	1	40 TO 43
19	CRANK SHAFT (WITH 3 GROOVE PULLEY)	DV0.003.1	1	44, 45
20	CYLINDER HEAD	DV0.007	10	46 TO 50
21	CYLINDER LINER	DV0.002	10	51
22	DELIVERY TUBE	DV0.042	1	52, 53
23	DV10 500KVA BANCO RADIATOR WITH CUT-OUT TYPE FAN GUARD	DV0.031.43	1	54
24	ENGINE FOOT	DV0.034	1	55
25	ENGINE WIRING HARNESS FOR DV0 GNESET CLOSE COUPLED (500 KVAWITH MCCB) WITH DSE 7420 UNIT	DV0.905.4	1	56
26	EXHAUST MANIFOLD	DV0.024	1	57 TO 59
27	EXHAUST PIPING FOR DV10 EXPORT	DV0.806.11	1	60
28	EXHAUST SILENCER FOR DV10	DV0.188.10	2	61
29	EXHAUST SYSTEM FOR DV8 EXPORT	DV0.064.2	1	62
30	FAN DRIVE ARRANGEMENT	DV0.029.4	1	63 TO 65
31	FILTER ELEMENTS	DV0.065	1	66
32	FLOAT TYPE LEVEL SENSOR,MAKE: RICO THREADING: 1" BSP, EFFECTIVE LENGTH 115 MM	DV0.901.25	1	67

SR.NO.	DESCRIPTION	GROUP NO.	QTY.	PAGE NO.
33	FLYWHEEL	DV0.026	1	68
34	FUEL FILTER	DV0.020	1	69
35	FUEL PIPES INLET RETURN FOR DV10 EXPORT ENGINE	DV0.507.5	1	70
36	FUEL PUMP	DV0.040	1	71 TO 78
37	FUEL PUMP CAP	DV0.019	1	79
38	GEAR CASING CUM FLYWHEEL HSG	DV0.025	1	80, 81
39	GEMS LOP TRANSMITTER 4-20 mA	DV0.812.1	1	82
40	HEAT SHIELD	DV0.051	1	83
41	HIGH PRESSURE PIPE (INTEGRAL SLEEVE)	DV0.021.2	1	84, 85
42	INJECTORS	DV0.008	10	86
43	INLET MANIFOLD	DV0.023	2	87, 88
44	ITERMEDIATE DOUBLE GEARS (CRANK GEAR AND CAM GEAR)	DV0.010	1	89, 90
45	ITERMEDIATE GEAR ASSLY (CAM & FUEL PUMP GEAR)	DV0.011	1	91
46	K LUB OIL	DV0.559.1	50	92
47	KIT GROUP	DV0.178	1	93
48	KIT GROUP FOR CC GENSET	DV8.509.2	1	94
49	KIT GROUP FOR EXHAUST	DV0.178.4	1	95
50	LEAK OFF CLAMPING ARRANGEMENT	DV0.045	1	96
51	LOOSE MATERIAL WITH DV10 EXPORT GENSET	DV0.806.19	1	97, 98
52	LUB OIL COOLER, HEADER AND FILTER	DV0.014	1	99 TO 102
53	LUB OIL PUMP	DV0.013	1	103, 104
54	LUB OIL SUMP AND DIPSTICK	DV0.017	1	105
55	LUBE OIL DRAIN ARRANGEMENT FOR DV 10	DV0.056	1	106
56	MATERIAL FOR "C" CHANNEL	DV2.031.28	2	107
57	MICO ALTERNATOR 24 V	F6.639.2	1	108
58	MICO ALTERNATOR MOUNTING	DV0.062.2	1	109
59	OIL & FUEL PIPINGS	DV0.069	1	110 TO 112
60	OILSEAL PULLEY END	DV0.012	1	113
61	PISTON	DV0.006	10	114
62	POWER HARNESS FROM ALTERNATOR TO CONTROL PANEL, (WITH UNINYWIN CABLE.)	DV0.906.2	1	115
63	PREFILTER	DV0.053	1	116
64	PROTECTION CAPS	DV0.075	1	117
65	RADIATOR HOSES & HOSE CLIPS	DV0.031.1	1	118
66	RADIATOR SUPPORT	DV0.049.1	1	119
67	ROCKER COVER	DV0.009	9	120
68	ROCKER COVER (WITH BREATHER)	DV2.009.2	1	121
69	SET OF STICKERS FOR DV8, DV10 & DV12	DV0.178.3	1	122, 123
70	STAMFORD ALTERNATOR 500 KVA, 380V, 3PH., 60Hz, HCI54D FRAME, SAE1/14" 12LEAD CONNECTION	DV0.097	1	124
71	STARTER	DV0.027	1	125
72	STAY PLATE FOR RADIATOR	DV0.031.07	2	126

SR.NO.	DESCRIPTION	GROUP NO.	QTY.	PAGE NO.
73	STICKER FOR "EARTHING"	38.065.13	1	127
74	STICKER FOR "KG500WS"	02.710.74	1	128
75	STICKER FOR "START"	38.065.11	1	129
76	STICKER FOR "STOP"	38.065.07	1	130
77	SUCTION TUBE	DV0.043	1	131
78	SUPRABHA BAG DIMN (L x W x H) 7200 x 2400 x 2700	2H.450.44	1	132
79	T BOLT CLAMP,KLIPCO TB78 / JUPITOR (84 TO 92 DIA)	4H.029.06	2	133
80	TAPPET AND PUSH ROD TUBE	DV0.018	20	134
81	THERMOSTAT HOUSING	DV0.015	1	135, 136
82	TORSIONAL VIBRATION DAMPER+ CRANK PULLEY	DV0.030	1	137
83	TURBOCHARGER AND MOUNTING	DV2.032	1	138 TO 140
84	VENT PIPE FOR RADIATOR	DV0.071	1	141
85	WATER OUT PIPE CLAMP ASSEMBLY	DV0.031.7	1	142
86	WATER PUMP	DV0.016	1	143
87	WIRING HARNESS TIE,200MM LENGTH, IN BLACK COLOUR,	02.1216.01	2	144
88	SET OF JOINTS	DV0.066.61	1	145 TO 148
89	SET OF COPPER WASHERS	DV0.066.62	1	148, 149
90	SET OF 'O' RINGS	DV0.066.63	1	150
91	SET OF BEARING		1	151

NOTE: - AS CONTINUOUS IMPROVEMENTS ARE CONTEMPLATED THE ILLUSTRATION AND DESCRIPTIONS ARE NOT BINDING

TITLE: - ADAPTOR (M22 X 1.5 - M18 X 1.5)	**GROUP: -** DV0.507.04

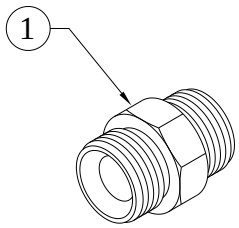

SR.NO.	PART NO.	DESCRIPTION	QTY.	REMARKS
1	DV0.507.04.0.00	ADAPTOR (M22 X 1.5 - M18 X 1.5)	2	

TITLE: - AIR CLEANER AND MOUNTING	**GROUP:** - DV0.505.1

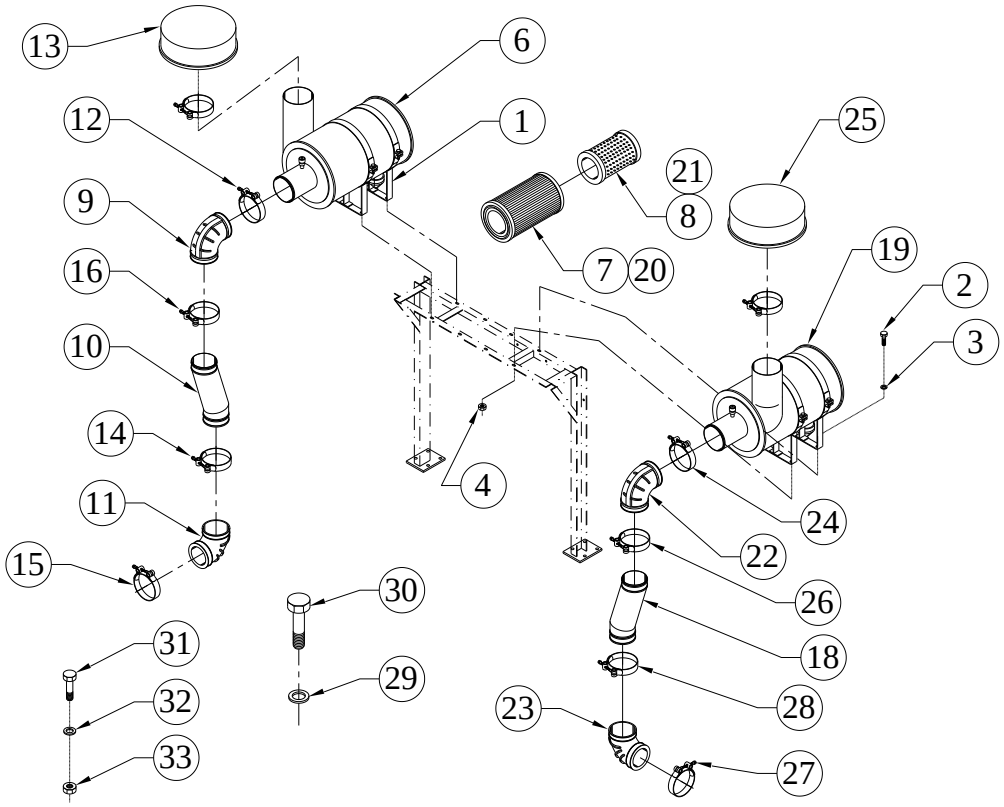

SR.NO.	PART NO.	DESCRIPTION	QTY.	REMARKS
1	KV2.505.12.0.00	STRAP FOR AIR CLEANER FOR 12K22TA DIA 14"	4	
2	50.002.10.030	SET BOLT - M10X1.5X30 - 8.8	8	
3	50.506.10.000	PLAIN MACHINED WASHER - M10	16	
4	50.006.10.000	NUT - M10X1.5 - GR.8	8	
*5	DV0.505.30.0.00	AIR CLEANER KIT FOR DV10 LH	1	CONSISTING OF SR. NO. 6 9 TO 16
6	DV0.505.10.0.00	AIR CLEANER LH SIDE	1	NOT SUPPLIED LOOSE
7	KV2.505.02.0.00	AIR CLEANER PRIMARY ELEMENT FOR 12K22TA ENGINE FLEET GAURD 14"	1	
8	KV2.505.03.0.00	AIR CLEANER SAFETY ELEMENT FOR 12K22TA ENGINE FLEET GAURD 14"	1	
9	DV0.035.08.0.00	HOSE REDUCER ELBOW	1	
10	DV0.035.13.0.00	PIPE ASSEMBLY POWDER COATED (DV8/DV10)	1	

TITLE: - AIR CLEANER AND MOUNTING	**GROUP:** - DV0.505.1

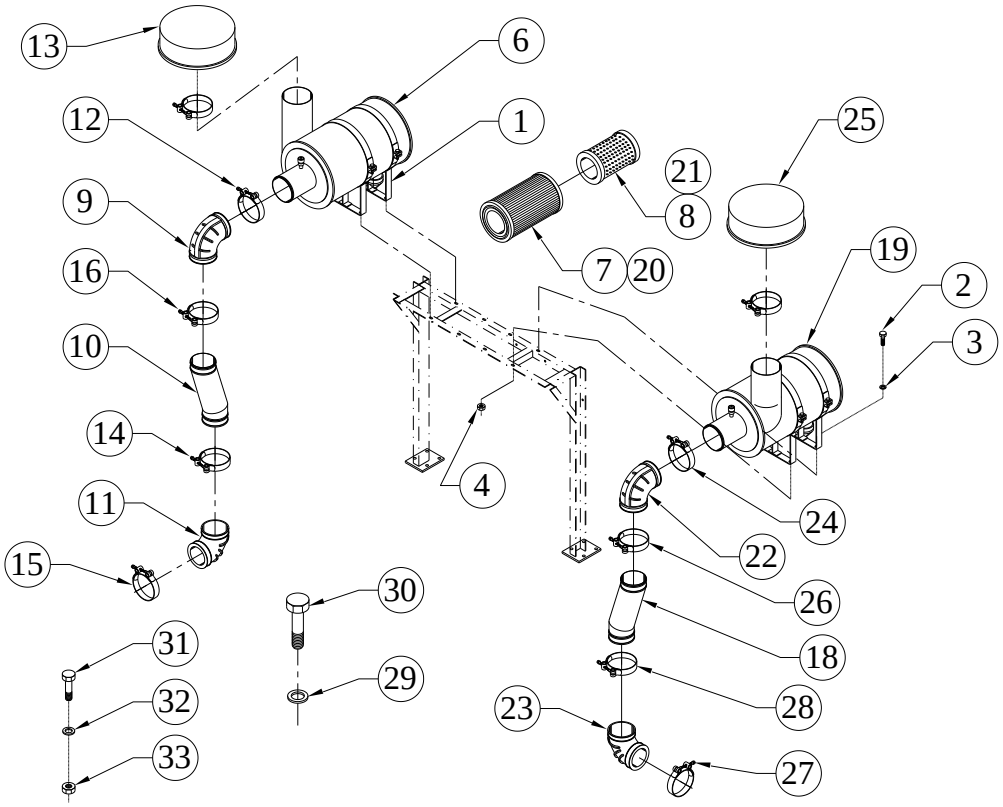

SR.NO.	PART NO.	DESCRIPTION	QTY.	REMARKS
11	DV0.035.04.0.00	HOSE, REDUCER ELBOW FOR DV10 (FLEETGUARD PART NO 8240406)	1	
12	F6.992.03.0.00	T BOLT TYPE HOSE CLAMP 106 ID	1	
13	DV0.035.09.0.00	RAIN HOOD, METAL FOR DV10 (FLEETGUARD PART NO 8330086)	1	
14	KV8.505.28.0.00	HOSE T BOLT CLAMP 138 MM ID	1	
15	DV0.505.01.0.00	HOSE CLAMP T BOLT	1	
16	DV0.505.02.0.00	HOSE CLAMP T BOLT	1	
*17	DV0.505.40.0.00	AIR CLEANER KIT FOR DV10 RH	1	CONSISTING OF SR. NO. 18, 19 & 22 TO 28
18	DV0.035.13.0.00	PIPE ASSEMBLY POWDER COATED (DV8/DV10)	1	
19	DV0.505.20.0.00	AIR CLEANER RH SIDE	1	NOT SUPPLIED LOOSE
20	KV2.505.02.0.00	AIR CLEANER PRIMARY ELEMENT FOR 12K22TA ENGINE FLEET GAURD 14"	1	

TITLE: - AIR CLEANER AND MOUNTING	**GROUP:** - DV0.505.1

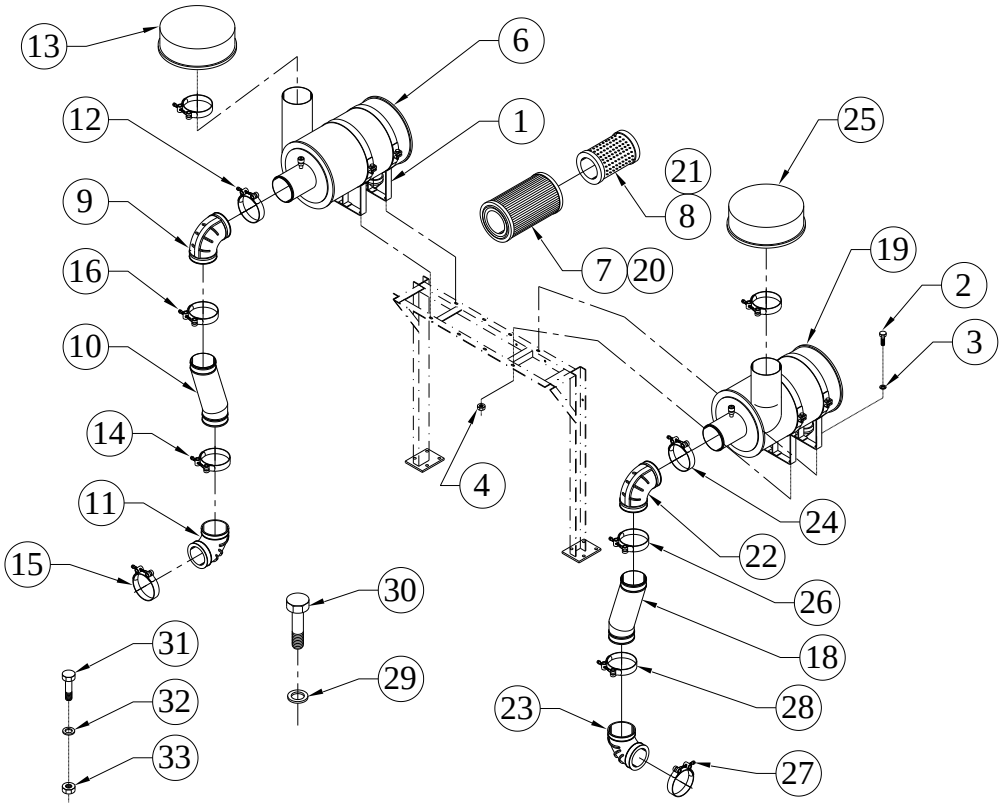

SR.NO.	PART NO.	DESCRIPTION	QTY.	REMARKS
21	KV2.505.03.0.00	AIR CLEANER SAFETY ELEMENT FOR 12K22TA ENGINE FLEET GAURD 14"	1	
22	DV0.035.08.0.00	HOSE REDUCER ELBOW	1	
23	DV0.035.04.0.00	HOSE, REDUCER ELBOW FOR DV10 (FLEETGUARD PART NO 8240406)	1	
24	F6.992.03.0.00	T BOLT TYPE HOSE CLAMP 106 ID	1	
25	DV0.035.09.0.00	RAIN HOOD, METAL FOR DV10 (FLEETGUARD PART NO 8330086)	1	
26	KV8.505.28.0.00	HOSE T BOLT CLAMP 138 MM ID	1	
27	DV0.505.01.0.00	HOSE CLAMP T BOLT	1	
28	DV0.505.02.0.00	HOSE CLAMP T BOLT	1	
29	50.506.12.000	PLAIN MACHINED WASHER - M12	8	
30	50.002.12.050	SET BOLT - M12X1.75X50 - 8.8	8	
31	50.002.08.050	SET BOLT - M8X1.25X50 - 8.8	4	
32	50.506.08.000	PLAIN MACHINED WASHER - M8	8	
33	50.006.08.000	NUT- M8X1.25 - GR.8	4	

TITLE: - AIR CLEANER BRACKET FOR DV10 EXPORT GENSET	**GROUP: -** DV0.035.18

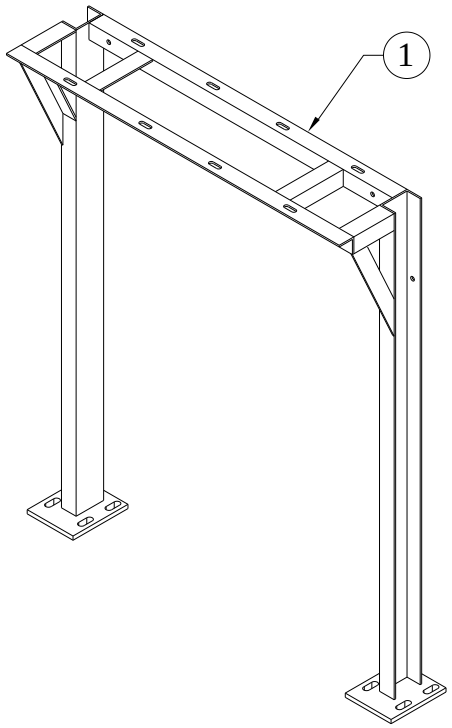

SR.NO.	PART NO.	DESCRIPTION	QTY.	REMARKS
1	DV0.035.18.0.00	AIR CLEANER BRACKET FOR DV10 EXPORT GENSET	1	

TITLE: - ANTI VIBRATION MOUNTS FOR DV SERIES	**GROUP: -** DV0.061.2

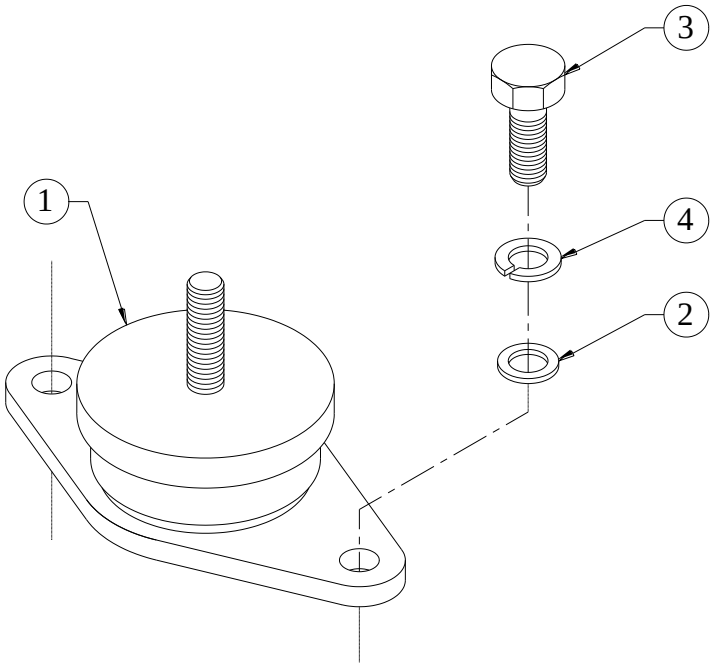

SR.NO.	PART NO.	DESCRIPTION	QTY.	REMARKS
1	DV0.061.01.0.00	ANTI VIBRATION MOUNTS FOR DV SERIES	6	
2	50.506.12.000.	PLAIN MACHINED WASHER - M12	12	
3	50.003.12.030.	SET SCREW - M12X1.75X30 - 8.8	12	
4	50.505.12.000.	SPRING WASHER - M12	12	

TITLE: - ASSEMBLY OF BASE PLATE & FUEL TANK FOR 500 KVA DV10 EXPORT SET (COMPACT)	**GROUP:** - DV0.225.2

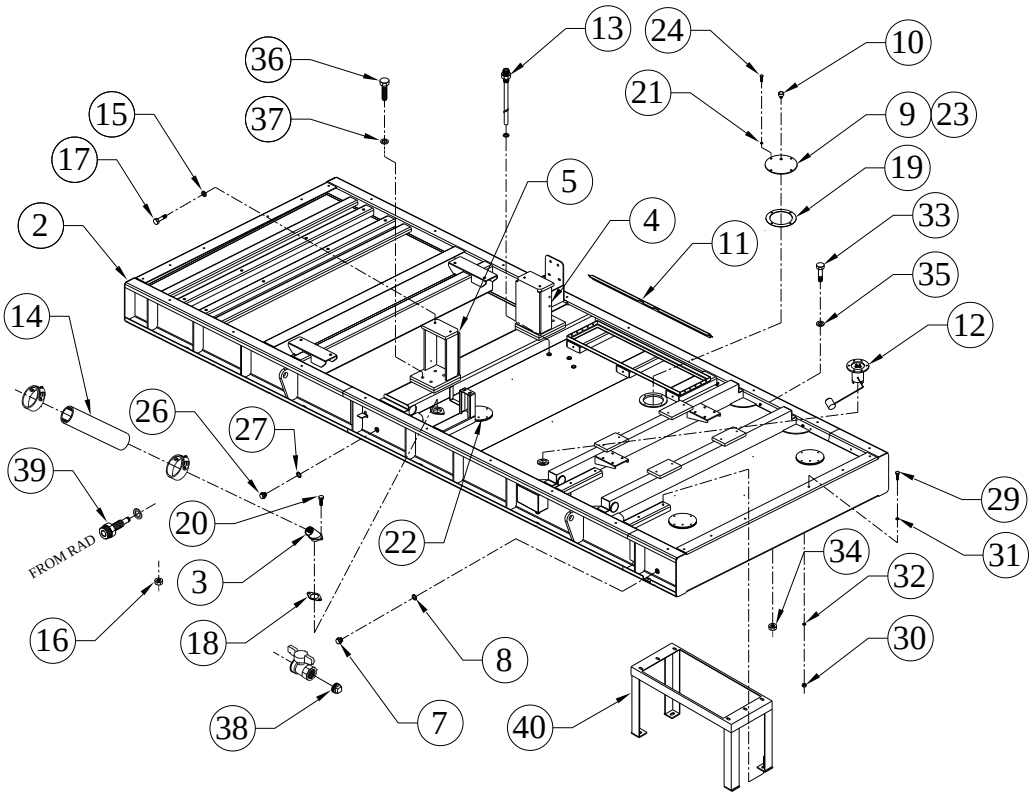

SR.NO.	PART NO.	DESCRIPTION	QTY.	REMARKS
*1	DV0.225.25.0.00	ASSEMBLY OF BASE PLATE WITH FUEL TANK FOR 500 KVA DV10 EXPORT SET (COMPACT)	1	CONSISTING OF SR. NO.-2 TO 6, 9 TO 11
2	DV0.225.20.0.00	BASE PLATE WITH FUEL TANK FOR 500 KVA DV10 EXPORT SET (COMPACT)	1	
3	06.055.17.0.00	FUEL SPOUT WITH MESH PLATE ASSELY 15 KVA	1	
4	DV0.808.11.0.00	ENGINE MOUNTING SUPPORT FOR ASSEMBLY 1	1	
5	DV0.808.12.0.00	ENGINE MOUNTING SUPPORT ASSEMBLY	1	
*6	2H.035.20.0.00	PLUG WITH MAGNET & 'O'RING.	3	CONSISTING OF SR. NO.- 7 & 8
7	2H.035.10.0.00	DRAIN PLUG ASSEMBLY.	1	
8	F6.024.47.0.00	O - RING FOR DRAIN PLUG	1	

TITLE: - ASSEMBLY OF BASE PLATE & FUEL TANK FOR 500 KVA DV10 EXPORT SET (COMPACT)	**GROUP:** - DV0.225.2

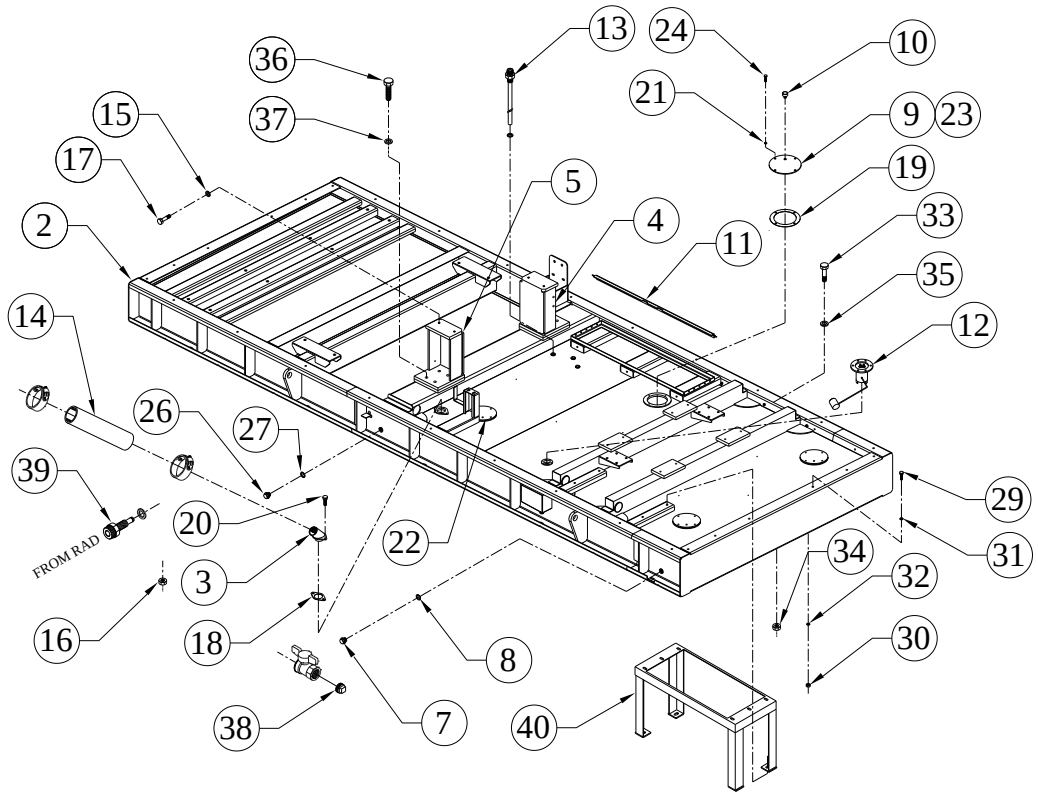

SR.NO.	PART NO.	DESCRIPTION	QTY.	REMARKS
9	KV2.515.02.0.00	COVER PLATE FOR FUEL TANK (S/F BREATHER)	4	
10	3H.173.05.0.00	BREATHER FOR FUEL TANK	1	
11	F6.792.01.0.00	BATTERY CLAMP (FOR DOUBLE BATTERY)	1	
12	DV0.802.15.0.00	FUEL LEVEL SENSOR HEIGHT 225 MM	1	
13	DV0.507.25.0.00	INLET AND OUTLET CONNECTION FOR DV10	3	
14	4H.572.07.0.00	FUEL FILLING HOSE	1	
15	50.506.12.000	PLAIN MACHINED WASHER - M12	16	
16	50.006.12.000	NUT - M12X1.75 - GR.8	8	
17	50.003.12.035	SET SCREW - M12X1.75X35 - 8.8	8	
18	4H.039.02.0.00	JOINT FOR W.I.CONN.& THERMO.HSG.	1	
19	03.774.04.0.00	JOINT FOR COVER(AUX.L.O.SUMP)	4	
20	50.003.08.015.	SET SCREW - M8X1.25X15 - 8.8	2	
21	50.506.08.000.	PLAIN MACHINED WASHER - M8	2	

TITLE: - ASSEMBLY OF BASE PLATE & FUEL TANK FOR 500 KVA DV10 EXPORT SET (COMPACT)	**GROUP:** - DV0.225.2

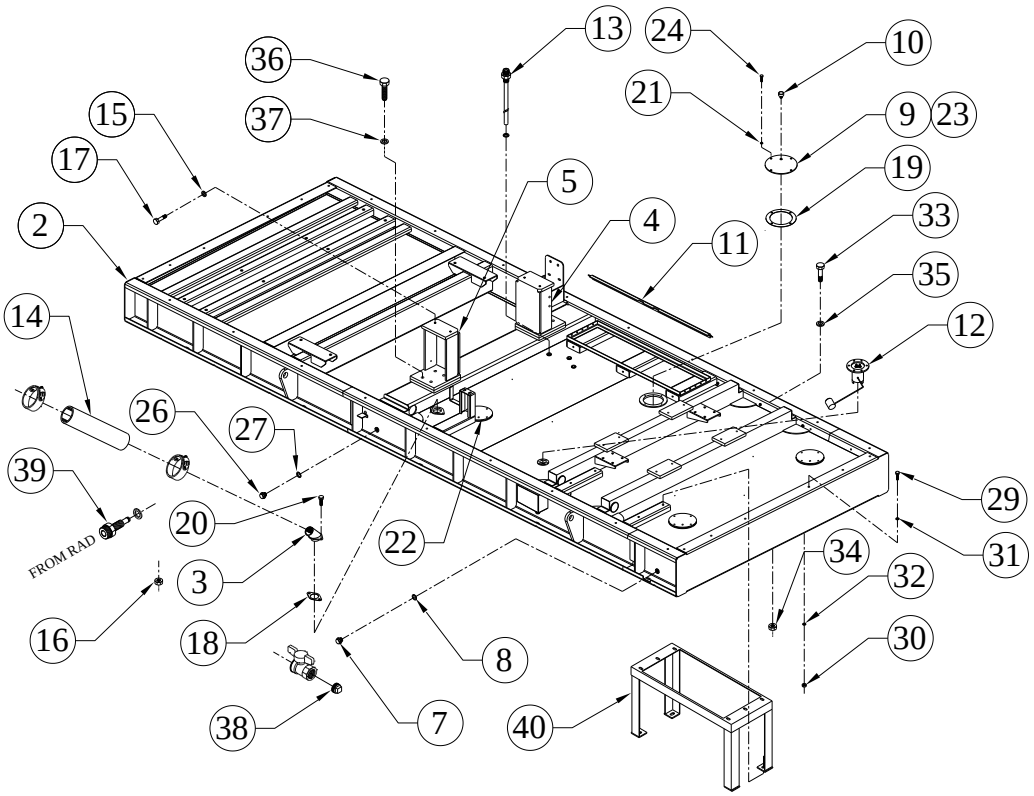

SR.NO.	PART NO.	DESCRIPTION	QTY.	REMARKS
22	49.386.07.0.00	COVER FOR FUEL TANK	3	
23	KV2.515.02.0.00	COVER PLATE FOR FUEL TANK (S/F BREATHER)	1	
24	50.003.08.020.	SET SCREW - M8X1.25X20 - 8.8	16	
*25	2H.035.20.0.00	PLUG WITH MAGNET & 'O'RING.	2	CONSISTING OF SR. NO.- 26 & 27
26	2H.035.10.0.00	DRAIN PLUG ASSEMBLY.	1	
27	F6.024.47.0.00	O - RING FOR DRAIN PLUG	1	
*28	6H.373.20.0.00	CANOPY MOUNTING FASTNERS ASSEMBLY	1	CONSISTING OF SR. NO.- 29 TO 32
29	50.003.10.025	SET SCREW - M10X1.5X25 - 8.8	30	
30	50.006.10.000	NUT - M10X1.5 - GR.8	30	
31	50.506.10.000	PLAIN MACHINED WASHER - M10	30	
32	50.548.10.000	SPECIAL PLAIN WASHER - M10	30	

TITLE: - ASSEMBLY OF BASE PLATE & FUEL TANK FOR 500 KVA DV10 EXPORT SET (COMPACT)	**GROUP:** - DV0.225.2

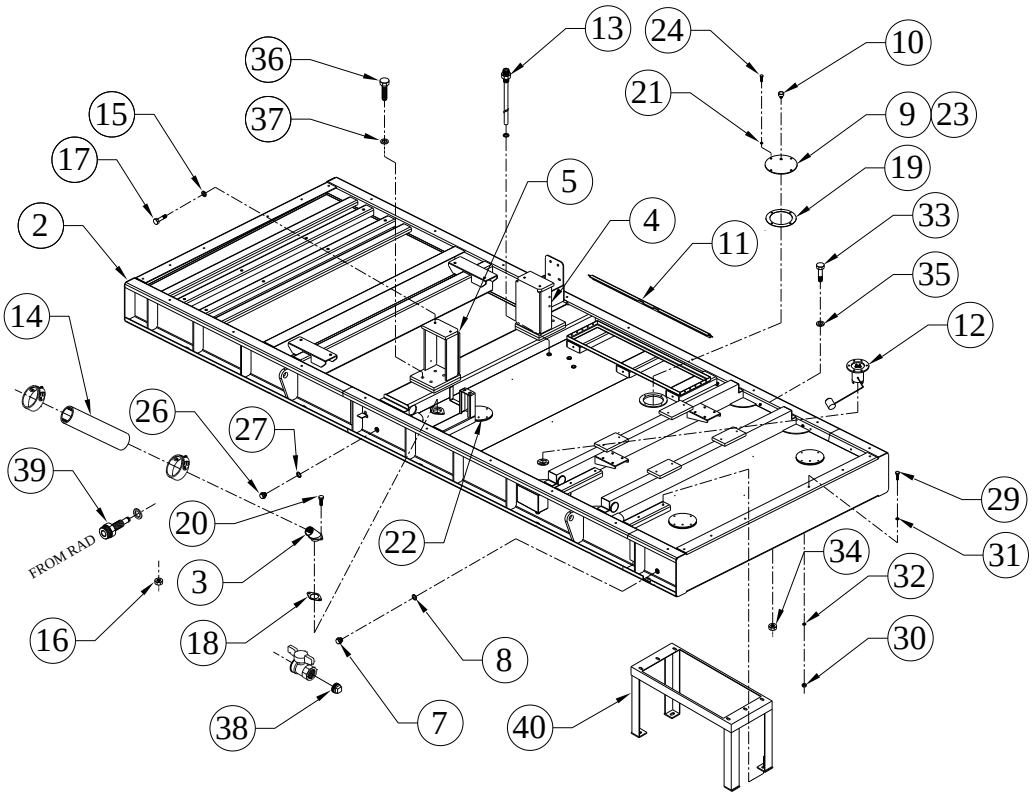

SR.NO.	PART NO.	DESCRIPTION	QTY.	REMARKS
33	2H.046.03.0.00	EARTHING BOLT OF M10X35 FOR SHANTI PROJECT (ROLLED BRASS TYPE)	3	
34	2H.046.04.0.00	EARTHING NUT FOR SHANTI (BRASS) M10X1.5	3	
35	2H.046.05.0.00	EARTHING WASHER ,M10(BRASS)	6	
36	50.003.16.035	SET SCREW - M16X2X35 - 8.8	8	
37	50.548.16.000	WASHER	8	
38	3H.153.08.0.00	PLUG (1/2" BSP) FOR DRAIN COCK	1	
39	3H.153.02.0.00	ADAPTOR FOR DRAIN COCK (1/2" BSP MAIL)	1	
40	DV0.806.48.0.00	CONTROL PANEL STAND FOR DV8 OPEN SET	1	

TITLE: -BATTERY CABLE 70 SQ.MM WITH SUITABLE LUG AND .LENGTH RED CABLE 500MM & BLACK CABLE 500 MM.	**GROUP:** - DV0.907

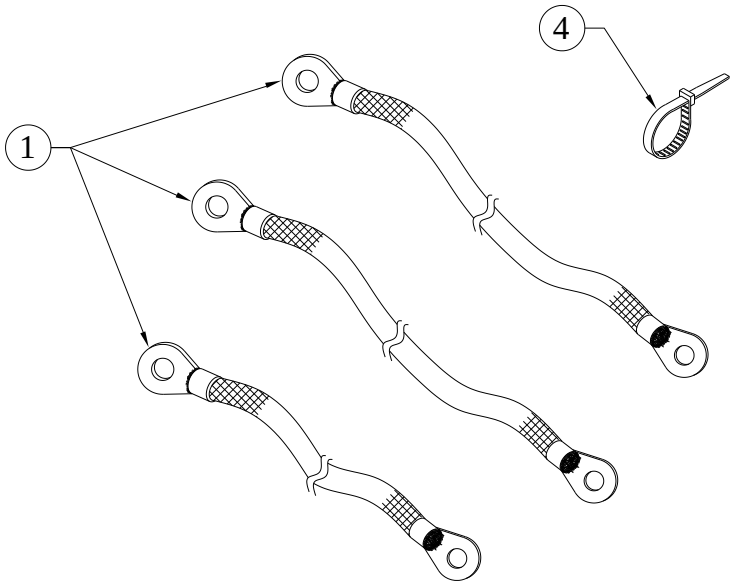

SR.NO.	PART NO.	DESCRIPTION	QTY.	REMARKS
1	DV0.907.10.0.00	BATTERY CABLE ASSEMBLY 70 SQ.MM WITH SUITABLE LUG AND .LENGTH RED CABLE 500 MM & BLACK CABLE 500 MM.	1	
*2	4H.450.16.0.00	TERMINAL SLEEVE (RED)	1	NOT ILLUSTRATED
*3	4H.450.17.0.00	TERMINAL SLEEVE (BLACK)	1	NOT ILLUSTRATED
4	3H.905.07.0.00	TIE WRAP 200 MM LENGTH	1	

TITLE: - BATTERY CLAMP FOR DV SERIES	**GROUP:** - DV0.902.4

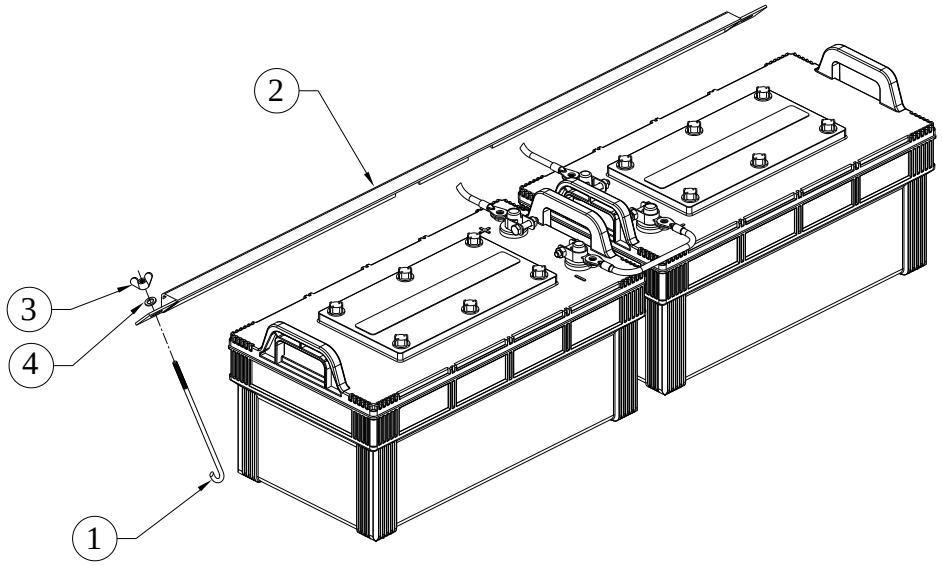

SR.NO.	PART NO.	DESCRIPTION	QTY.	REMARKS
1	F6.792.03.0.00	BATTERY CLAMP STUD FOR 160 KVA	2	
2	F6.792.01.0.00	BATTERY CLAMP (FOR DOUBLE BATTERY)	1	
3	50.047.05.000.	WING NUT(M6)	2	
4	50.548.06.000.	WASHER	2	

TITLE: - BREATHER AND MOUNTING	**GROUP:** - DV0.046

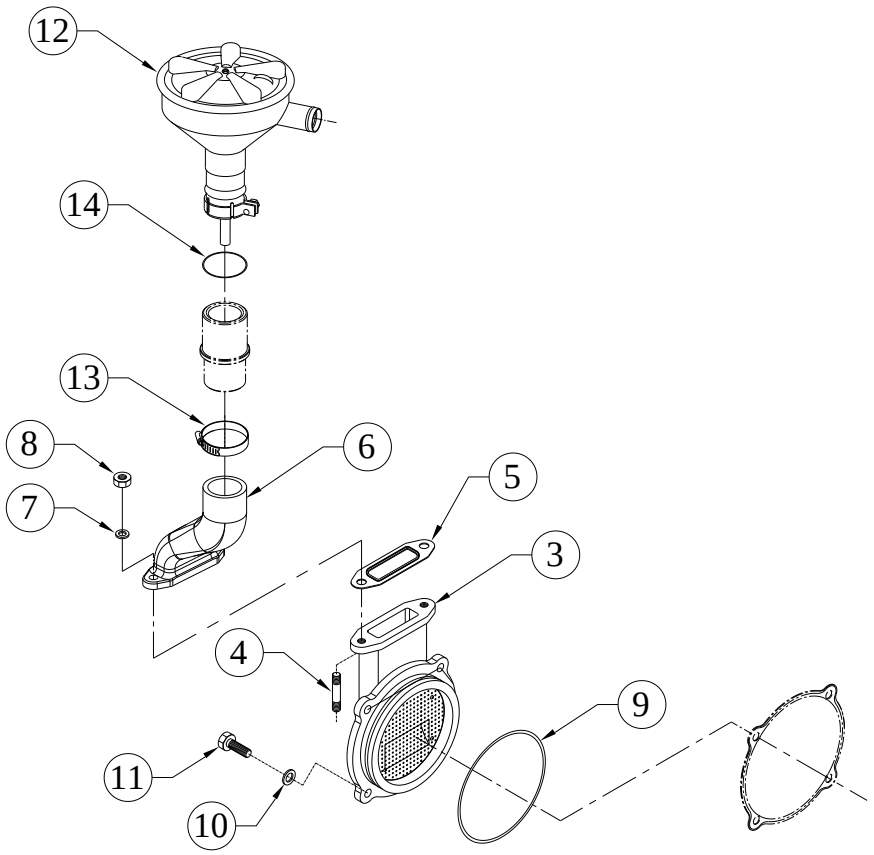

SR.NO.	PART NO.	DESCRIPTION	QTY.	REMARKS
*1	DV0.046.20.0.00	BREATHER ASM	1	CONSISTING OF SR. NO. 2, 9 & 11
*2	DV0.046.10.0.00	BREATHER PLATE ASM	1	CONSISTING OF SR. NO. 3 TO 8
3	DV0.046.01.0.00	BREATHER PLATE	1	
4	50.010.08.040.	STUD - M8X1.25X40 - 8.8	2	
5	DV0.046.04.0.00	JOINT (BET. BREATER PLATE & ADAPTER)	1	
6	DV0.046.02.0.00	BREATHER ADAPTOR	1	
7	50.506.08.000.	PLAIN MACHINED WASHER - M8	2	
8	50.080.08.000.	NUT (SS) - M8x1.25	2	
9	DV0.046.03.0.00	O RING FOR BREATHER PLATE	1	
10	50.506.08.000.	PLAIN MACHINED WASHER - M8	4	
11	50.003.08.020.	SET SCREW - M8X1.25X20 - 8.8	4	
12	DV0.046.07.0.00	CRANKCASE BREATHER (DV ENGINE)	1	

TITLE: - BREATHER AND MOUNTING	**GROUP:** - DV0.046

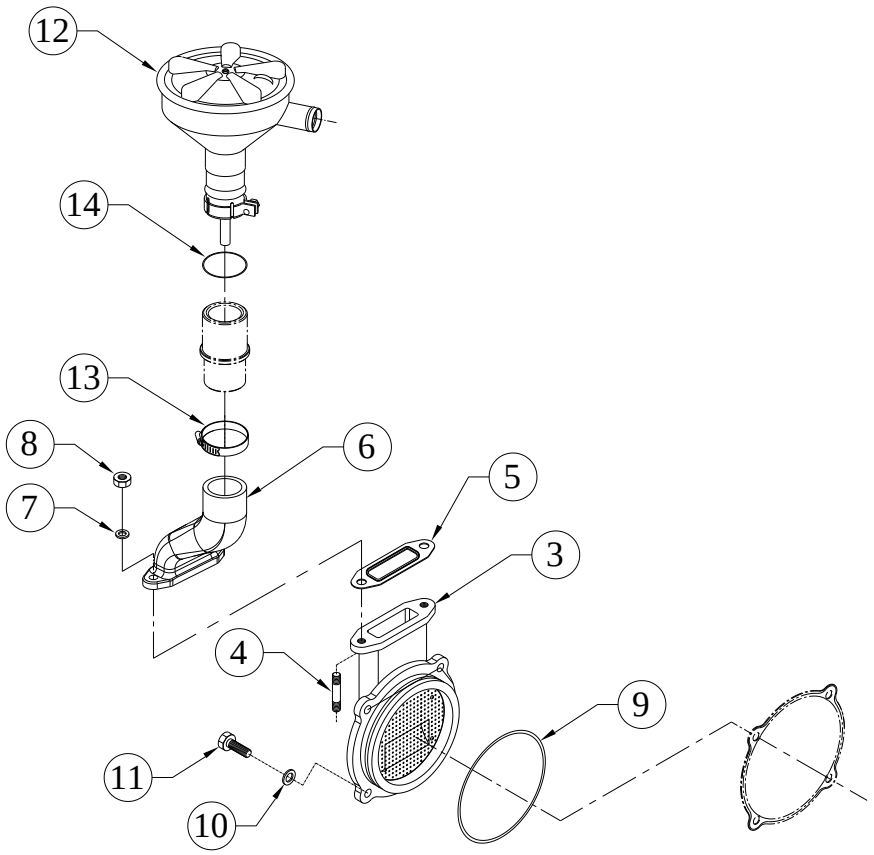

SR.NO.	PART NO.	DESCRIPTION	QTY.	REMARKS
13	50.519.07.000.	WORM DRIVE HOSE CLIP (35 MM)	1	
14	DV0.046.09.0.00	`O' RING	1	

TITLE: - BREATHER PIPE ASSELY FOR DOUBLE BREATHER	**GROUP: -** DV0.054.2

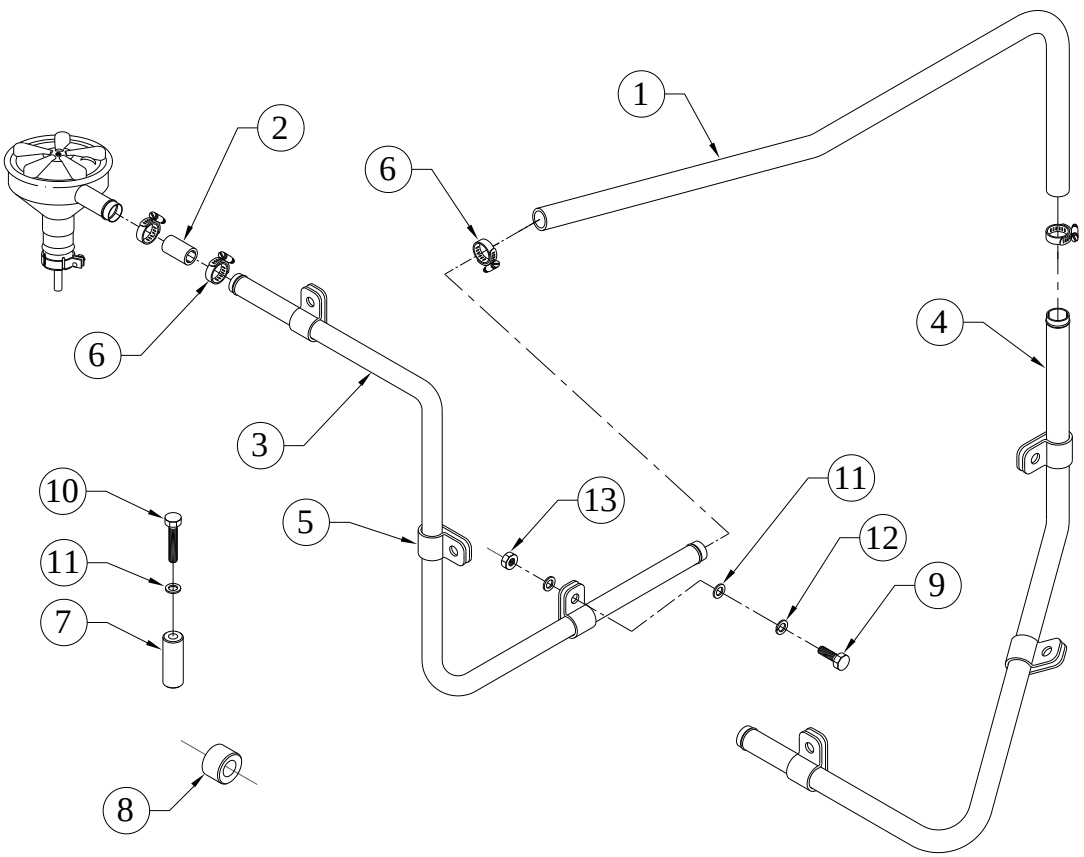

SR.NO.	PART NO.	DESCRIPTION	QTY.	REMARKS
1	DV0.031.70.0.00	BREATHER HOSE FOR EXPORT	2	
2	DV2.054.01.0.00	BREATHER HOSE(BREATHER TO BREATHER PIPE)	2	
3	DV0.031.71.0.PR	BREATHER PIPE	1	
4	DV0.031.72.0.00	BREATHER PIPE	1	
5	DV0.031.21.0.00	CLIP (FOR BREATHER PIPE)	6	
6	50.519.07.000.	WORM DRIVE HOSE CLIP (35 MM)	8	
7	4H.626.14.0.00	SPACER FOR AIR CLEANER BRACKET (OD 20X ID 9 X L 52)	4	
8	4H.198.03.0.00	SPACER (FOR EYE BOLT)	2	
9	50.003.08.040.	SET SCREW - M8X1.25X40 - 8.8	2	
10	50.003.08.070.	SET SCREW	4	
11	50.506.08.000.	PLAIN MACHINED WASHER - M8	12	
12	50.505.08.000.	SPRING WASHER - M8	6	
13	50.006.08.000.	NUT- M8X1.25 - GR.8.8	6	

TITLE: - CAC PIPES & FASTNERS	**GROUP:** - DV0.033.2

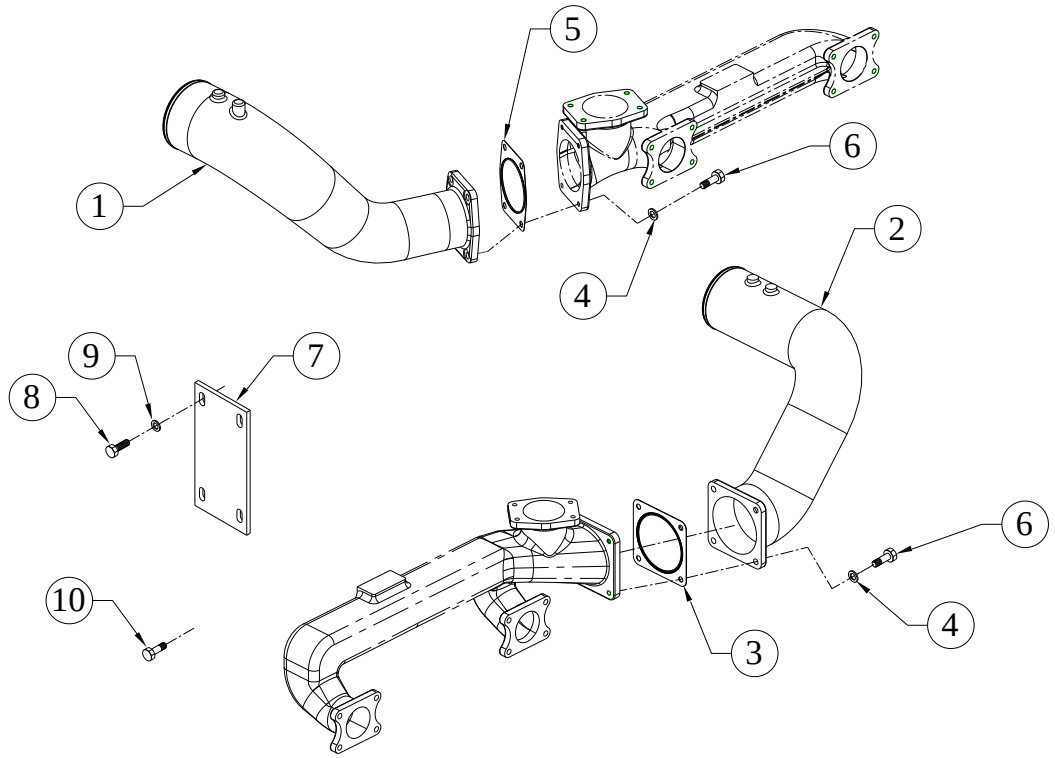

SR.NO.	PART NO.	DESCRIPTION	QTY.	REMARKS
1	DV0.033.26.0.00	AIR INLET PIPE T/C TO CAC	1	
2	DV0.033.28.0.00	AIR INLET PIPE FROM CAC	1	
3	DV0.033.11.0.00	JOINT (BETWEEN MAIN AIR PIPE HORIZONTAL & VERTICAL)	1	
4	50.506.10.000.	PLAIN MACHINED WASHER - M10	8	
5	DV0.033.13.0.00	JOINT (BET.MAIN AIR PIPE HOR+VER)	1	
6	50.002.10.035.	SET BOLT - M10X1.5X35 - 8.8	8	
7	DV0.033.45.0.00	JOINING PLATE (FOR AIR PIPE)	1	
8	50.003.08.018.	SET SCREW - M8X1.25X18 - 8.8	4	
9	50.506.08.000.	PLAIN MACHINED WASHER - M8	4	
10	50.002.10.070.	SET BOLT - M10X1.5X70 - 8.8	4	

TITLE: - CAC PIPING	**GROUP:** - DV0.033

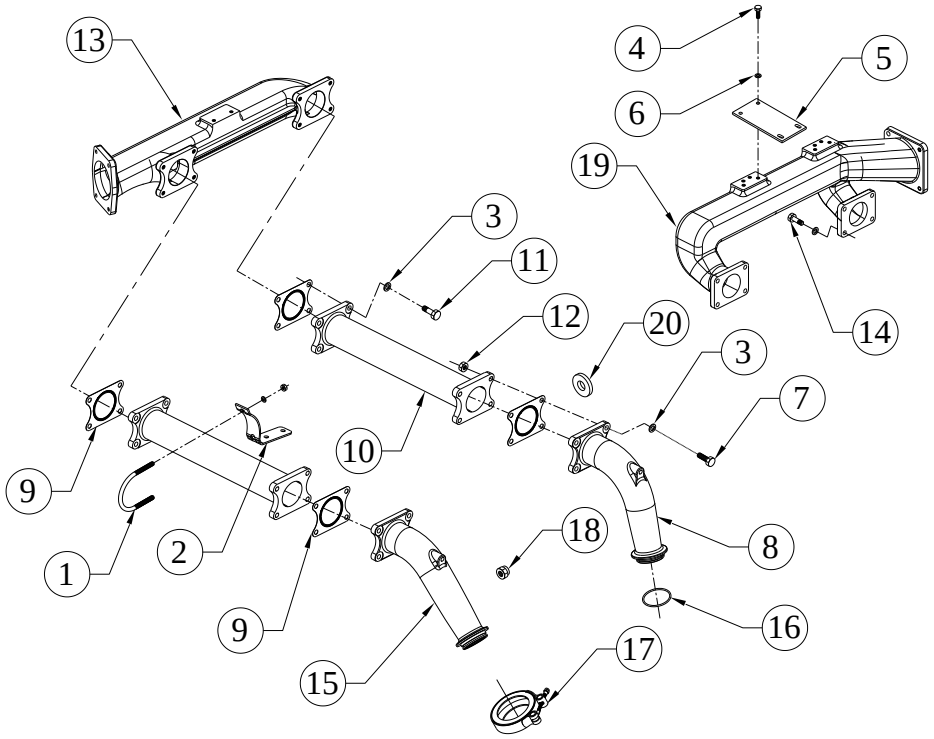

SR.NO.	PART NO.	DESCRIPTION	QTY.	REMARKS
1	DV0.033.23.0.00	CLAMP(FOR AIR PIPE)	4	
2	DV0.033.25.0.00	BRACKET (FOR AIR PIPE MOUNTING)	4	
3	50.506.10.000	PLAIN MACHINED WASHER - M10	42	
4	50.003.08.018	SET SCREW - M8X1.25X18 - 8.8	4	
5	DV0.033.45.0.00	JOINING PLATE (FOR AIR PIPE)	1	
6	50.548.08.000	SPL.PLAIN M/CED WASHER	4	
7	50.003.10.030	SET SCREW - M10X1.5X30 - 8.8	8	
8	DV0.033.34.0.00	TURBO COMPRESSOR OUT PIPE (LH VIEW FROM FWE)	1	
9	DV0.033.14.0.00	JOINT (BET.BEND TO AIR PIPE)	4	
10	DV0.033.03.0.00	AIR PIPE	2	
11	50.002.10.045	SET BOLT - M10X1.5X45 - 8.8	16	
12	50.006.10.000	NUT - M10X1.5 - GR.8	26	
13	DV0.033.61.0.00	MAIN AIR PIPE (HORIZONTAL CAC INLET) LM 25	1	
14	50.002.10.035	SET BOLT - M10X1.5X35 - 8.8	8	

TITLE: - CAC PIPING	**GROUP:** - DV0.033

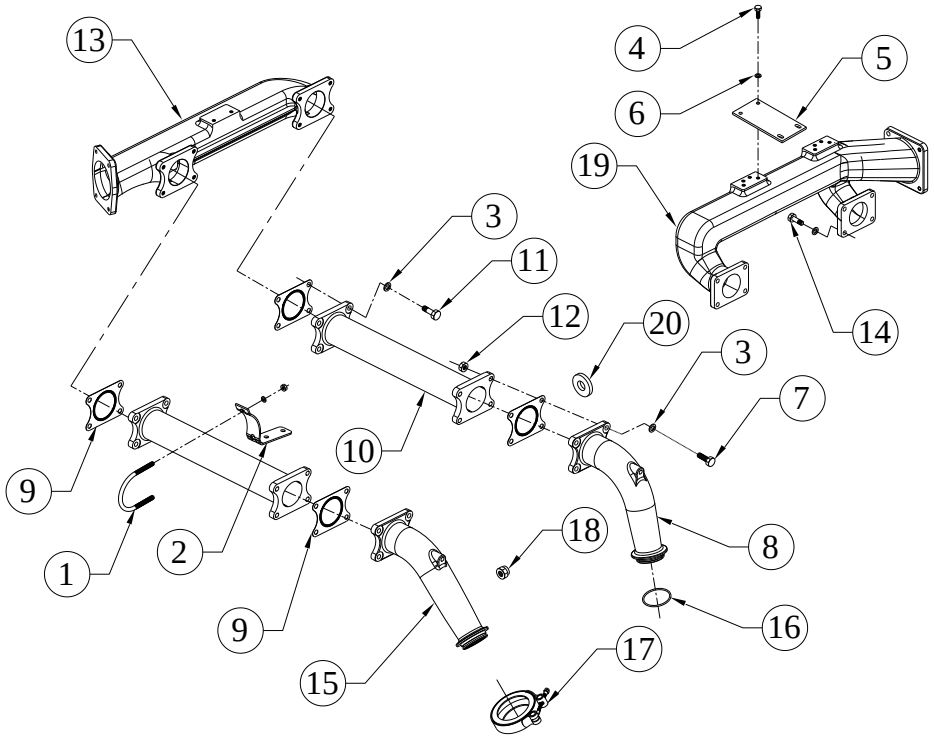

SR.NO.	PART NO.	DESCRIPTION	QTY.	REMARKS
15	DV0.033.35.0.00	TURBO COMPRESSOR OUT PIPE (RH VIEW FROM FWE)	1	
16	DV0.033.38.0.00	O RING (FOR COMPRESSOR OUT PIPE)	2	
17	DV0.033.67.0.00	V-BAND CLAMP (88MM NOMINAL DIA.)	2	
18	4H.781.11.0.00	NYLOCK NUT FOR JCB LOGING (M8X1.25)	8	
19	DV0.033.62.0.00	MAIN AIR PIPE (HORIZONTAL CAC OUT)LM25	1	
20	03.716.03.0.00	WASHER(FUEL PUMP GEAR)	8	

TITLE: - CAMSHAFT	**GROUP:** - DV0.004

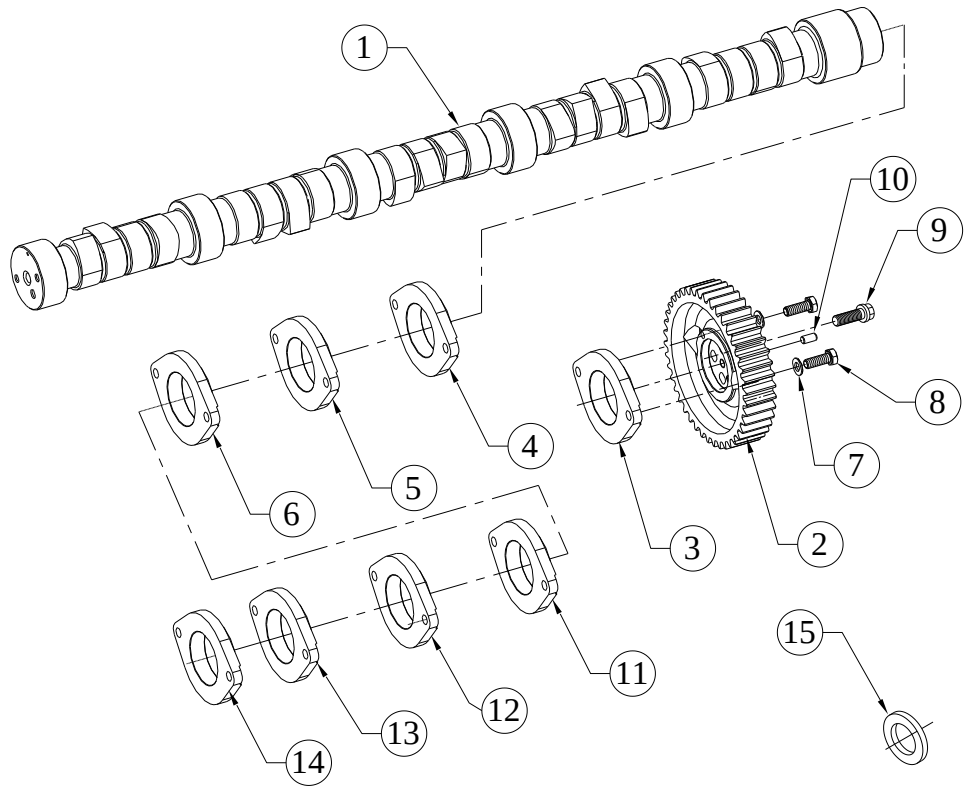

SR.NO.	PART NO.	DESCRIPTION	QTY.	REMARKS
1	DV0.004.01.0.00	CAMSHAFT (MACHINING)	1	NOT SUPPLIED LOOSE
2	DV8.004.02.0.00	CAM GEAR	1	NOT SUPPLIED LOOSE
3	DV0.004.03.0.00	THRUST PLATE FOR CAM SHAFT	1	NOT SUPPLIED LOOSE
4	DV0.004.07.0.00	THRUST PLATE FOR CAM SHAFT (WIDHT 17.9)	1	NOT SUPPLIED LOOSE
5	DV0.004.08.0.00	THRUST PLATE FOR CAM SHAFT (WIDHT 18.1)	1	NOT SUPPLIED LOOSE
6	DV0.004.09.0.00	THRUST PLATE FOR CAM SHAFT (WIDHT 18.2)	1	NOT SUPPLIED LOOSE
7	50.506.10.000.	PLAIN MACHINED WASHER - M10	2	
8	50.003.10.025.	SET SCREW - M10X1.5X25 - 8.8	2	
9	DV0.004.06.0.00	SPECIAL BOLT (FOR CAM SHAFT)	4	
10	50.401.08.025.	DOWEL PIN 8X25	1	
11	DV0.004.11.0.00	THRUST PLATE FOR CAMSHAFT (18.7 mm. THICK)	1	NOT SUPPLIED LOOSE

TITLE: - CAMSHAFT	**GROUP:** - DV0.004

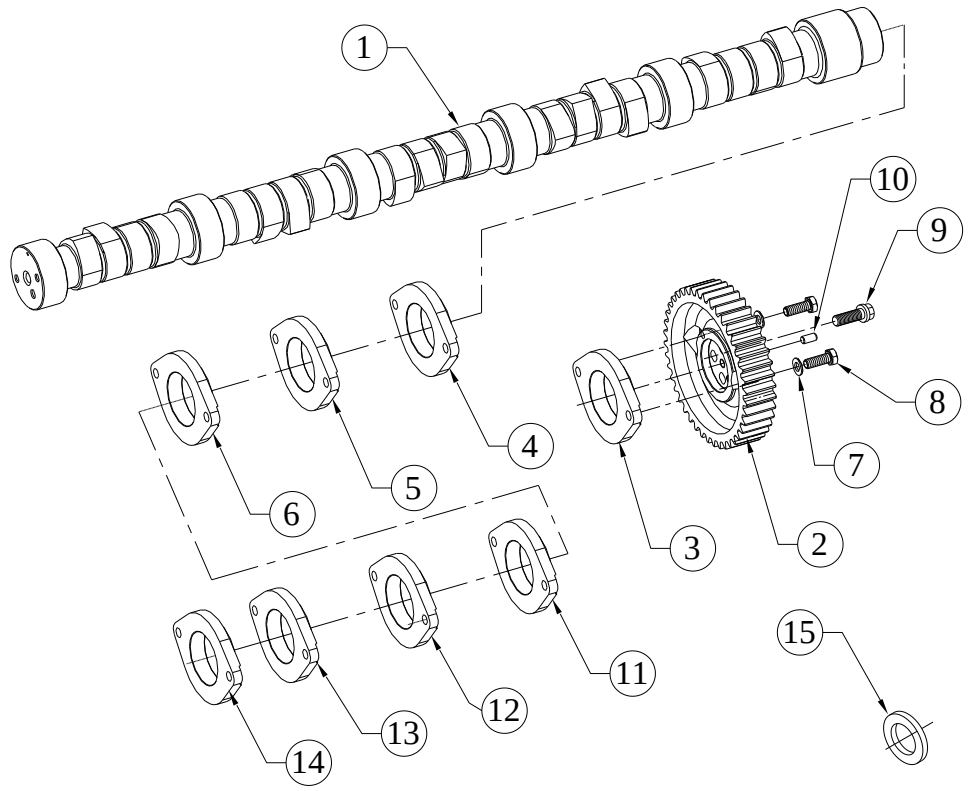

SR.NO.	PART NO.	DESCRIPTION	QTY.	REMARKS
12	DV0.004.12.0.00	THRUST PLATE FOR CAMSHAFT (18.3 mm. THICK)	1	NOT SUPPLIED LOOSE
13	DV0.004.13.0.00	THRUST PLATE FOR CAMSHAFT (17.5 mm THICK)	1	NOT SUPPLIED LOOSE
14	DV0.004.14.0.00	THRUST PLATE FOR CAMSHAFT (17.3 mm THICK)	1	NOT SUPPLIED LOOSE
15	50.506.12.000.	PLAIN MACHINED WASHER - M12	4	

TITLE: - CANOPY FOR 500 KVA DV10 EXPORT SET (COMPACT)	**GROUP:** - DV0.225.1

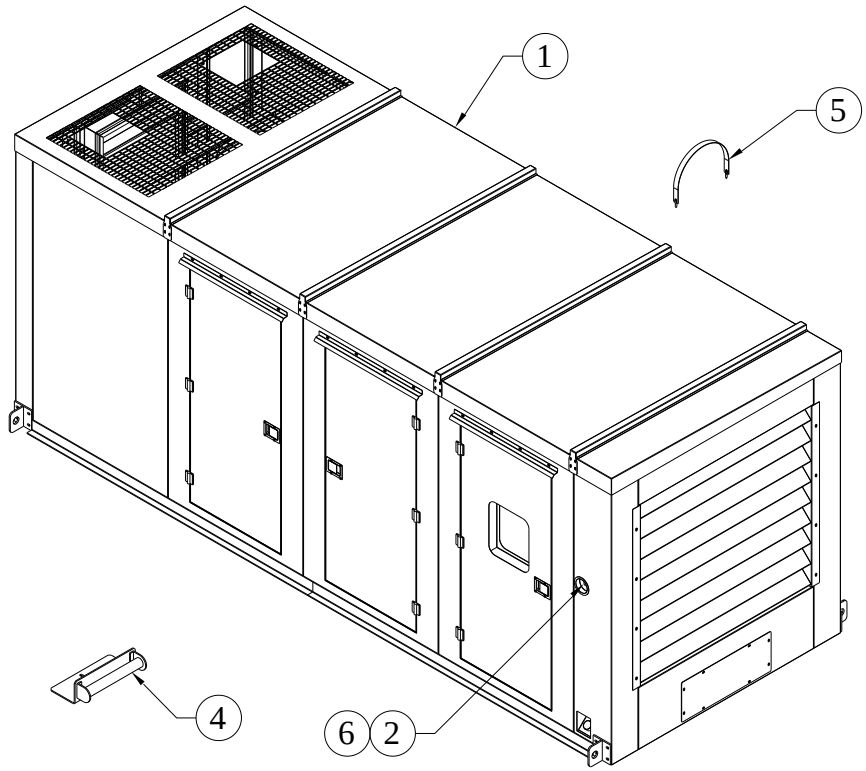

SR.NO.	PART NO.	DESCRIPTION	QTY.	REMARKS
1	DV0.225.10.0.00	CANOPY FOR 500 KVA DV10 EXPORT SET (COMPACT)	1	CONSISTING OF SR.NO. 2 TO 12
2	4H.448.34.0.00	CUP FOR EMERGENCY STOP	1	
*3	2H.148.01.0.00	CANOPY DOOR BIDDING 18mm DIA. BULB FOR CPCB PROJECT (1 no = 1 mtr)	38	NOT ILLUSTRATED
4	F6.864.03.0.00	24 VDC TUBE SET FOR CONTROL PANEL(BHARAT DEEP MAKE)	3	
5	DV0.806.35.0.00	SILENCER CLAMP S/F 460 DIA.	2	
6	6H.880.13.0.00	EMERGENCY STOP PB(WITH NC ELEMENT)SCHNEIDER/TELEMECANIQUE MAKE HORMONY RANGE RELEASE MUSHROOM TYPE XB5A542N	1	
*7	2H.198.01.0.00	DP MAKE FOAM 40 DENSITY,THK 40 MM X 1M X 2M	2.25	NOT ILLUSTRATED

TITLE: - CANOPY FOR 500 KVA DV10 EXPORT SET (COMPACT)	**GROUP: -** DV0.225.1

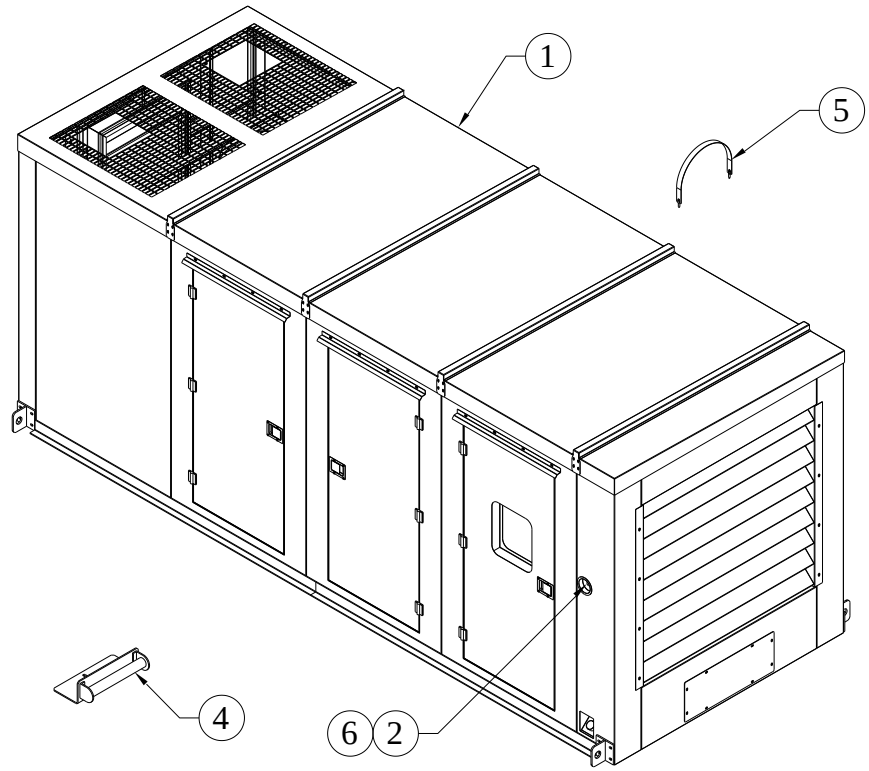

SR.NO.	PART NO.	DESCRIPTION	QTY.	REMARKS
*8	84.000.08.4.10	CANOPY NAME PLATES	3	NOT ILLUSTRATED

TITLE: - CANOPY WIRING HANRESS FOR 500KVA MODIFIED CANOPY , DV10 GENSET(S/F DEEP SEA 7320 UNIT)	**GROUP:** - DV0.901.2

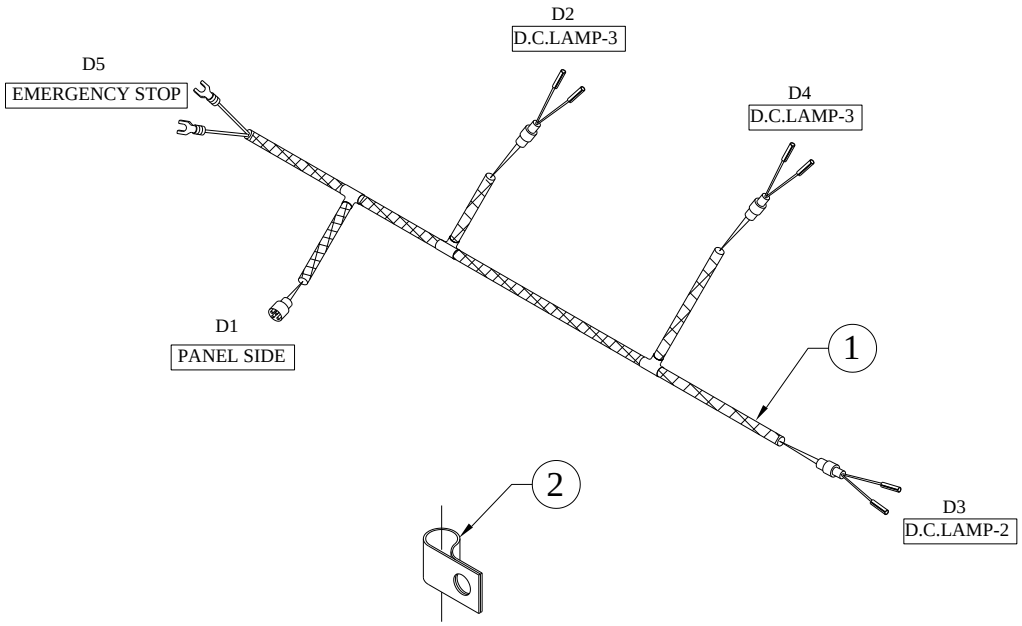

SR.NO.	PART NO.	DESCRIPTION	QTY.	REMARKS
1	DV0.901.40.0.00	CANOPY WIRING HANRESS ASSEMBLY FOR 500KVA MODIFIED CANOPY , DV10 GENSET(S/F DEEP SEA 7320 UNIT)	1	
2	34.151.03.0.00	CLIP FOR FLEXIBLE PIPE WITH SLEEVE	10	

TITLE: - CETRIFUGAL FITER AD ASSLY.	**GROUP:** - DV0.041

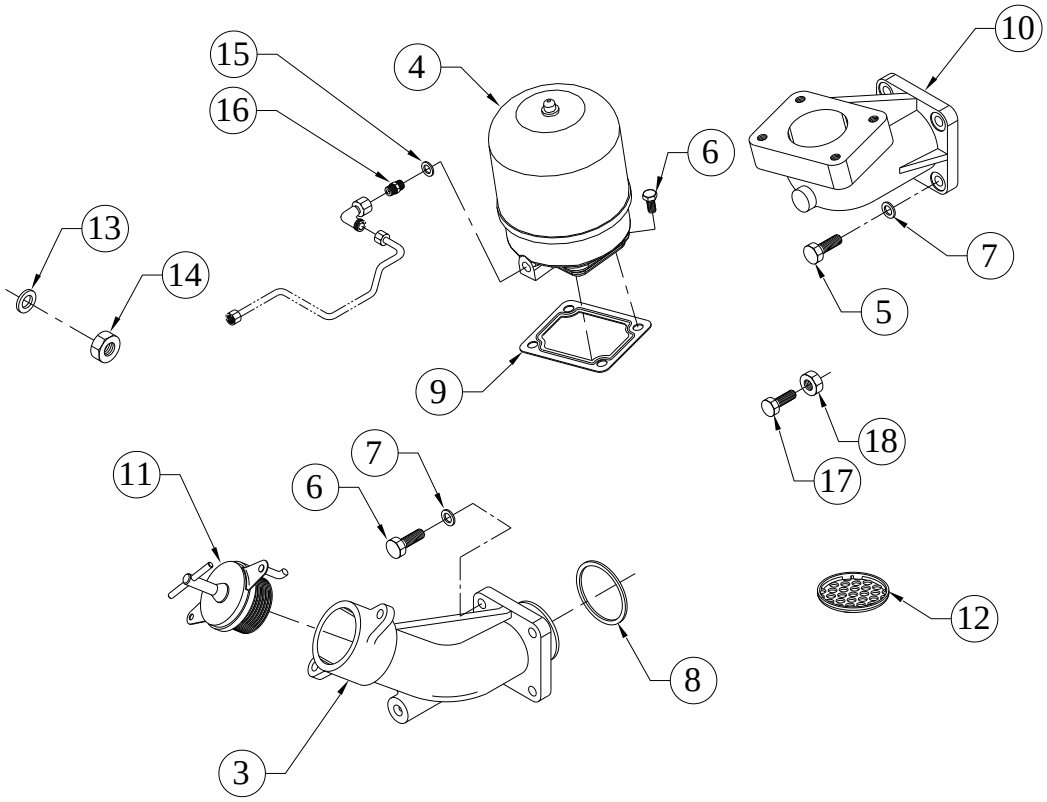

SR.NO.	PART NO.	DESCRIPTION	QTY.	REMARKS
*1	DV0.041.20.0.00	CENTRIFUGE MTG. ASSLY	1	CONSISTING OF SR. NO. 2 & 11 TO 18
*2	DV0.041.10.0.00	CENTRIFUGE MTG. SUB ASSLY	1	CONSISTING OF SR. NO. 3 TO 10
3	DV0.041.16.0.00	OIL FILLING PIPE	1	
4	DV0.041.70.0.00	CENTRIFUGAL OIL CLEANER (BAND DESIGN)	1	
5	50.003.08.025.	SET SCREW - M8X1.25X25 - 8.8	4	
6	50.003.08.030.	SET SCREW - M8X1.25X30 - 8.8	8	
7	50.506.08.000.	PLAIN MACHINED WASHER - M8	8	
8	DV0.041.17.0.00	`O' RING FOR OIL FILLING PIPE	2	
9	DV0.041.04.0.00	GASKET (JOINT BETWEEN CENTRIFUGAL ADAPTOR AND FILTER)	2	
10	DV0.041.42.0.00	CENTRIFUGE ADAPTOR	1	
11	P2.039.07.0.00	CAP ASSLY. (LOCKABLE)	1	
12	34.036.50.0.00	PERFORATED DISC.	1	

TITLE: - CETRIFUGAL FITER AD ASSLY.	**GROUP: -** DV0.041

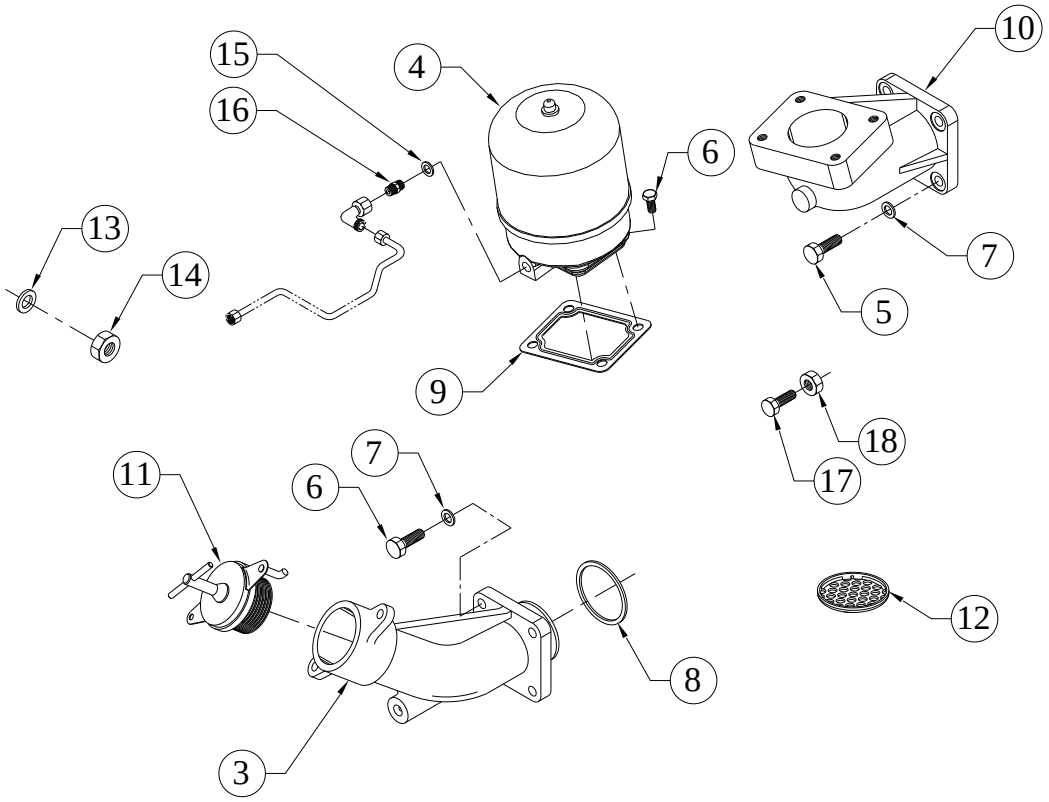

SR.NO.	PART NO.	DESCRIPTION	QTY.	REMARKS
13	50.506.08.000.	PLAIN MACHINED WASHER - M8	4	
14	50.008.08.000.	LOCK NUT - M8X1.25 - GR.8	4	
15	50.508.14.000.	COPPER WASHER (16X22)	1	
16	DV0.041.15.0.00	ADAPTOR FOR CENTRIFUGE FILTER	1	
17	50.003.06.030.	SET SCREW - M6X1X30 - 8.8	1	
18	50.006.06.000.	NUT - M6X1 - GR.8	1	

TITLE: - CONNECTING ROD	**GROUP:** - DV0.005

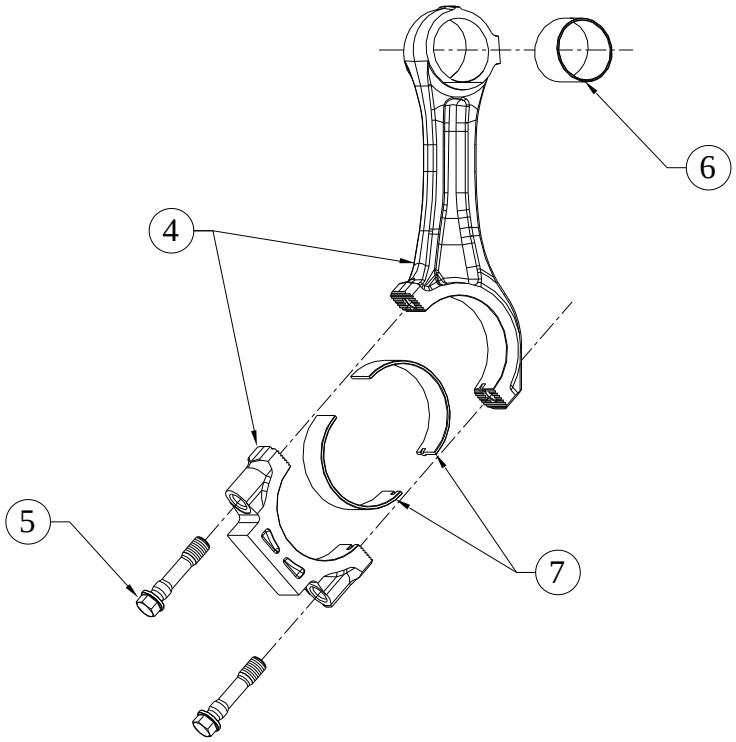

SR.NO.	PART NO.	DESCRIPTION	QTY.	REMARKS
*1	DV0.005.30.0.00	CON ROD ASSEMBLY WITH BEARING	1	CONSISTING OF SR. NO. 2 & 7
*2	DV0.005.20.0.00	CONNECTING ROD ASSLY.WITH SMALL END BUSH WITH LARGE END BEARING	1	CONSISTING OF SR. NO. 3 NOT SUPPLIED LOOSE
*3	DV0.005.10.0.00	CONNECTING ROD ASSLY.WITH SMALL END BUSH	1	CONSISTING OF SR. NO. 4,6
4	DV0.005.01.0.00	CONNECTING ROD (M/C)	1	CONSISTING OF SR. NO.5
5	DV0.005.02.0.00	CONNECTING ROD BOLT	2	
6	DV0.005.07.0.00	SMALL END BUSH	1	
7	DV0.005.06.0.00	BIG END BEARING (STD)	2	NOT SUPPLIED LOOSE

TITLE: - CONTROL PANEL 500 KVA 3PH.380/ 415V WITH DSE 7420 CONTROL UNIT	**GROUP:** - DV0.850.5

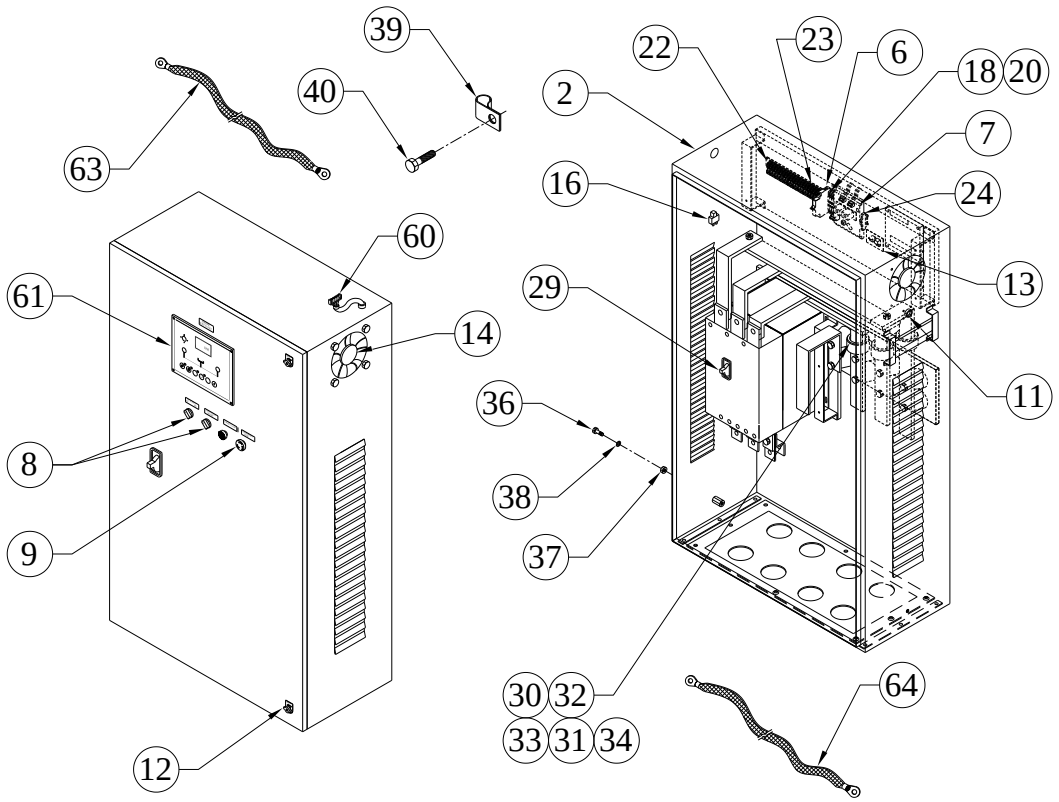

SR.NO.	PART NO.	DESCRIPTION	QTY.	REMARKS
*1	DV0.851.30.0.00	500 KVA 3PH.380/415 V CONTROL PANEL ASSEMBLY WITH DSE 7420 CONTROL UNIT	1	CONSISTING OF SR. NO. 2 TO 5, 17, 28, 35, 41,60
2	DV8.856.02.0.PR	FAB DRAWING STD CONTROL PANEL WITH DSE 7420 UNIT FOR 400 TO 500 KVA EXPORT PROJECT	1	
*3	DV8.857.21.0.PR	ENGINE CONTROL DWG.WITH DSE 7420UNIT FOR SILENT SET	1	NOT ILLUSTRATED
*4	DV8.858.14.0.PR	24V DC LOAD DUMP MODULE	1	NOT ILLUSTRATED
*5	DV0.850.50.0.00	ELECT. COMPONANT ASSEMBLY FOR 500 KVA CONTROL PANEL WITH DSE 7420	1	CONSISTING OF SR. NO. 6 TO 16
6	3H.864.04.0.00	MCB 32A SP MERLINGERIN MAKE(C60H1P32AC)	1	
7	DV0.853.07.0.PR	RELAY BOARD 1.5 CHANNEL UL MAKE 70 Amp CAPACITY 24V DC	1	

TITLE: - CONTROL PANEL 500 KVA 3PH.380/ 415V WITH DSE 7420 CONTROL UNIT	**GROUP:** - DV0.850.5

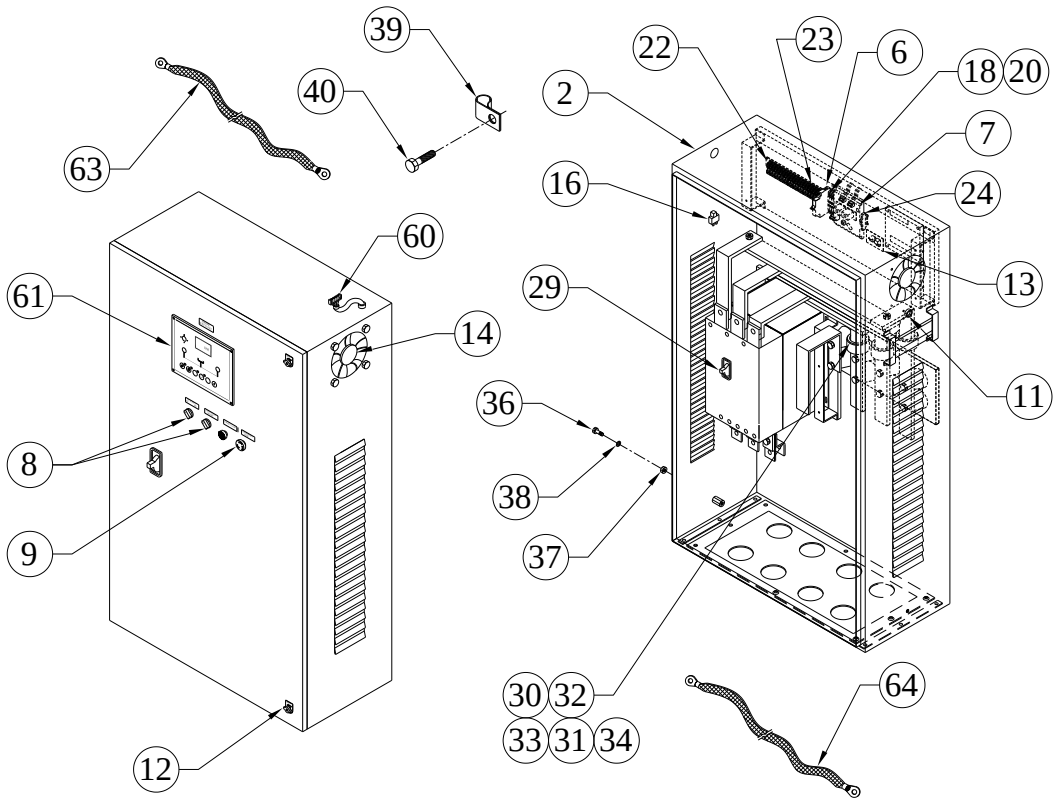

SR.NO.	PART NO.	DESCRIPTION	QTY.	REMARKS
8	6H.880.12.0.00	ON/FF SELECTOR SW.(WITH NO ELEMENT)SCHNEIDER/TELEMECANIQUE MAKE HORMONY RANGE 2 WAY SELECT. STAY TYPE XB5AD21N & ZBE-1O1N ELEMENT	3	
9	6H.880.13.0.00	EMERGENCY STOP PB(WITH NC ELEMENT)SCHNEIDER/TELEMECANIQUE MAKE HORMONY RANGE RELEASE MUSHROOM TYPE XB5A542N	1	
10	2H.875.14.0.00	ALLIED/AMFINOL MAKE 10 PIN CONNECTOR TYPE MS3102R-18-1P	1	
*11	04.932.04.0.00	10 PIN CONNECTOR ALLIDE/AMFINOL MAKE TYPE MS3106F-18-1S	1	NOT ILLUSTRATED
12	6H.880.16.0.00	DOOR LOCK DARSHANA MAKE ,TYPE-DM3WL-,DIE CAST ,STANDARD GRIP 30MM	2	

TITLE: - CONTROL PANEL 500 KVA 3PH.380/ 415V WITH DSE 7420 CONTROL UNIT	**GROUP:** - DV0.850.5

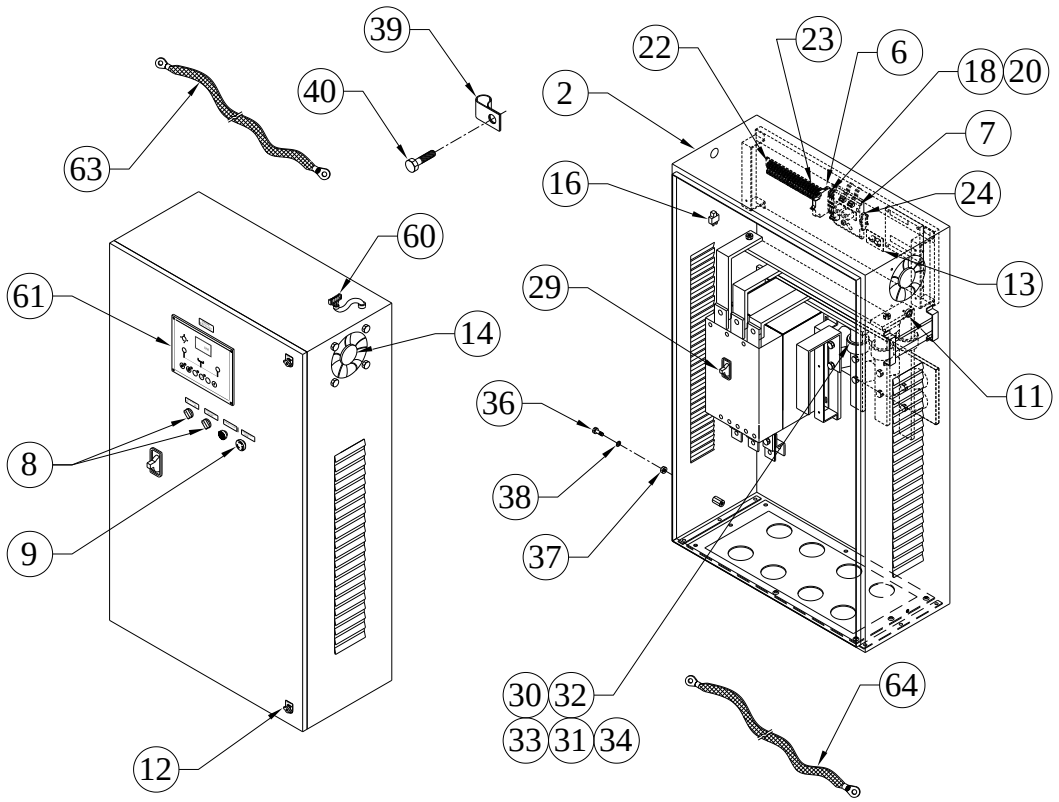

SR.NO.	PART NO.	DESCRIPTION	QTY.	REMARKS
13	F6.406.01.0.00	RELAY OMRAN MAKE 24 V D.C 2 C/O	1	
14	DV0.856.08.0.00	EXHOUST FAN,, 6', Rexnord Make With Filter	1	
*15	02.834.03.0.00	MSSL MAKE CONNECTOR 250 SERIES 2PIN FEMALE CONNECTOR (HOUSING 60702481-2) WITH FEMALE PINS(TERMINALS 82404140) (FOR PANEL)	1	NOT ILLUSTRATED
16	F6.860.11.0.PR	RELAY 24VDC,100A BAGLA MAKE	1	
*17	DV0.850.60.0.00	TERMINAL FUSE, PVC CHANEL, TERMINAL STRIP ASSEMBLY FOR STD. PANEL FOR 24 VDC WITH DSE 7320	1	CONSISTING OF SR. NO. 18 TO 27
18	4H.865.08.0.00	FUSE HOLDER WITH FUSE BLOWN INDICATOR PHONIX MAKE (220/230V)	4	
*19	4H.865.09.0.00	GLASS FUSE 2AMP. 20 MM RELAINCE/ EI MAKE	3	NOT ILLUSTRATED

TITLE: - CONTROL PANEL 500 KVA 3PH.380/ 415V WITH DSE 7420 CONTROL UNIT	**GROUP:** - DV0.850.5

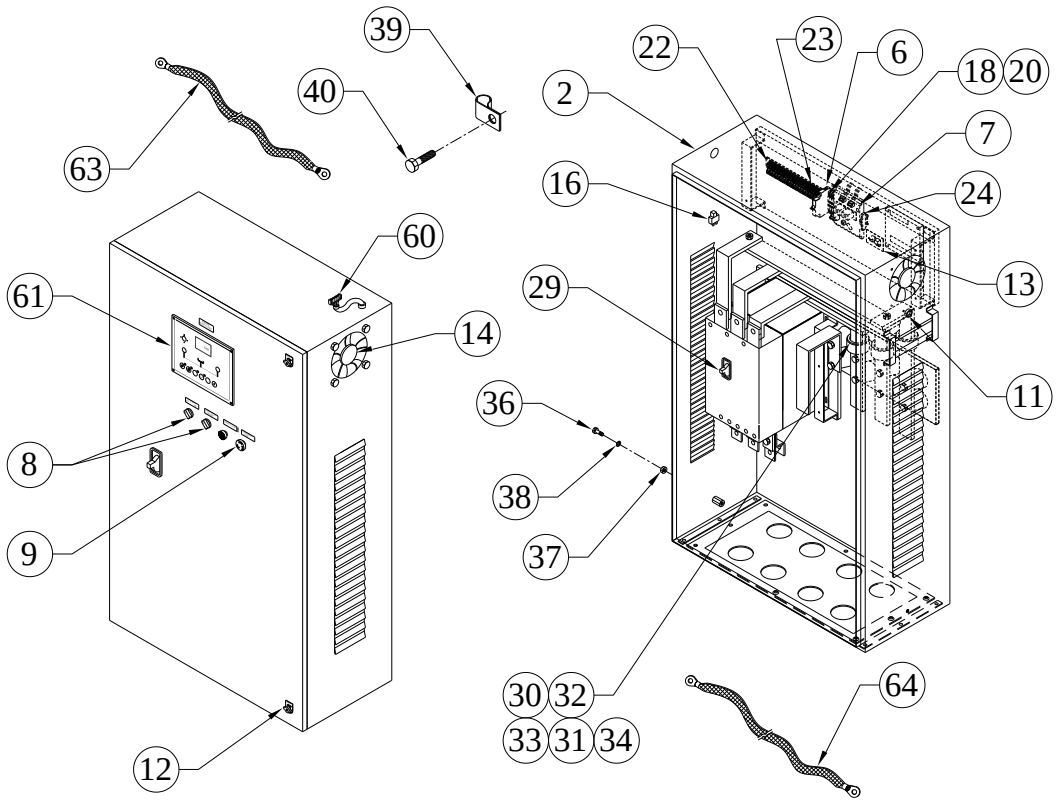

SR.NO.	PART NO.	DESCRIPTION	QTY.	REMARKS
20	KV8.853.06.0.00	FUSE BLOWN INDICATOR 12/24 VDC CONNECTWELL MAKE	3	
*21	3H.870.08.0.00	GLASS FUSE 20 MM LENGTH 4 AMP	1	NOT ILLUSTRATED
22	4H.865.22.0.00	CONTROL TERMINAL 6 SQ.MM,600V,50A,TYPE-CTS6U, CONNECTWELL MAKE	4	
23	38.346.02.0.00	CONTROL TERMINAL 4 SQ.MM.,600V,25A,TYPE-CTS4UN,CONNECTWELL MAKE	15	
24	KV8.853.07.0.00	CONNECTWELL MAKE END CLAMP (AS REQUIRED)	6	
*25	2H.892.12.0.00	CONNECTWELL MAKE END PLATES FOR 4 SQ.MM TERMINAL STRIPS	2	NOT ILLUSTRATED
*26	3H.870.09.0.00	GLASS FUSE 6 AMP 20MM LENGTH	1	NOT ILLUSTRATED
*27	46.480.11.0.00	CONNECTWELL MAKE END PLATES FOR 6 SQ.MM TERMINAL STRIPS	1	NOT ILLUSTRATED

TITLE: - CONTROL PANEL 500 KVA 3PH.380/ 415V WITH DSE 7420 CONTROL UNIT	**GROUP: -** DV0.850.5

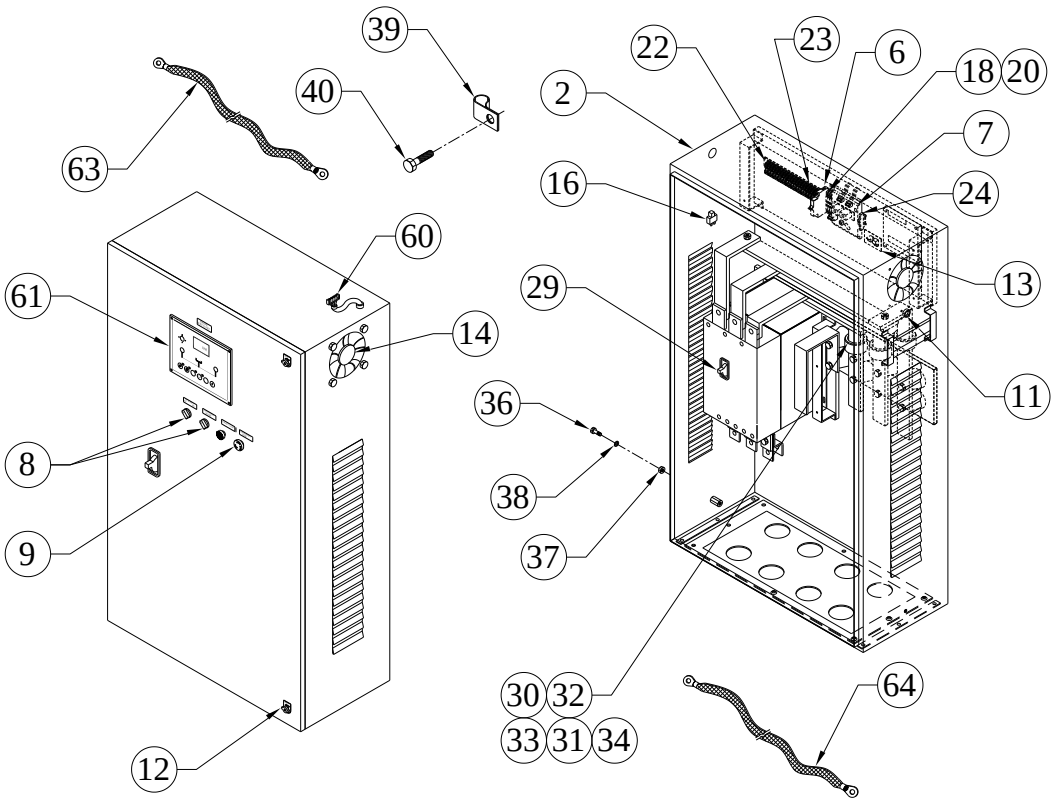

SR.NO.	PART NO.	DESCRIPTION	QTY.	REMARKS
*28	DV0.850.40.0.00	MCCB, C.T. BUS BAR ASSEMBLY 800 AMP.	1	CONSISTING OF SR. NO. 29 TO 34
29	DV0.850.11.0.00	SCHNIEDER MAKE MCCB 3 P 800 AMP.TYPE-LV580300	1	
30	KV8.855.05.0.00	CURRENT TRANSFARMOR 800/5, 5 VA (NEWTEK MAKE)	3	
31	F6.888.05.0.00	CURRENT TRANSFARMOR 400/5, 5 VA (NEWTEK MAKE)	1	
32	F6.864.04.0.00	BUS BAR SUPPORT INSULATOR 50 MM LENGTH	8	
33	DV0.850.06.0.00	COPPER BUS BAR ZINCK PLATED 40X12.5 MM WITH INSHULATED SLIVE	3	
34	6H.849.12.0.00	COPPER BUS BAR (PLATED) 40X5 MM	1	
*35	2H.892.70.0.00	EARTHING ASSEMBLY	1	CONSISTING OF SR. NO. 36 TO 40

TITLE: - CONTROL PANEL 500 KVA 3PH.380/ 415V WITH DSE 7420 CONTROL UNIT	**GROUP:** - DV0.850.5

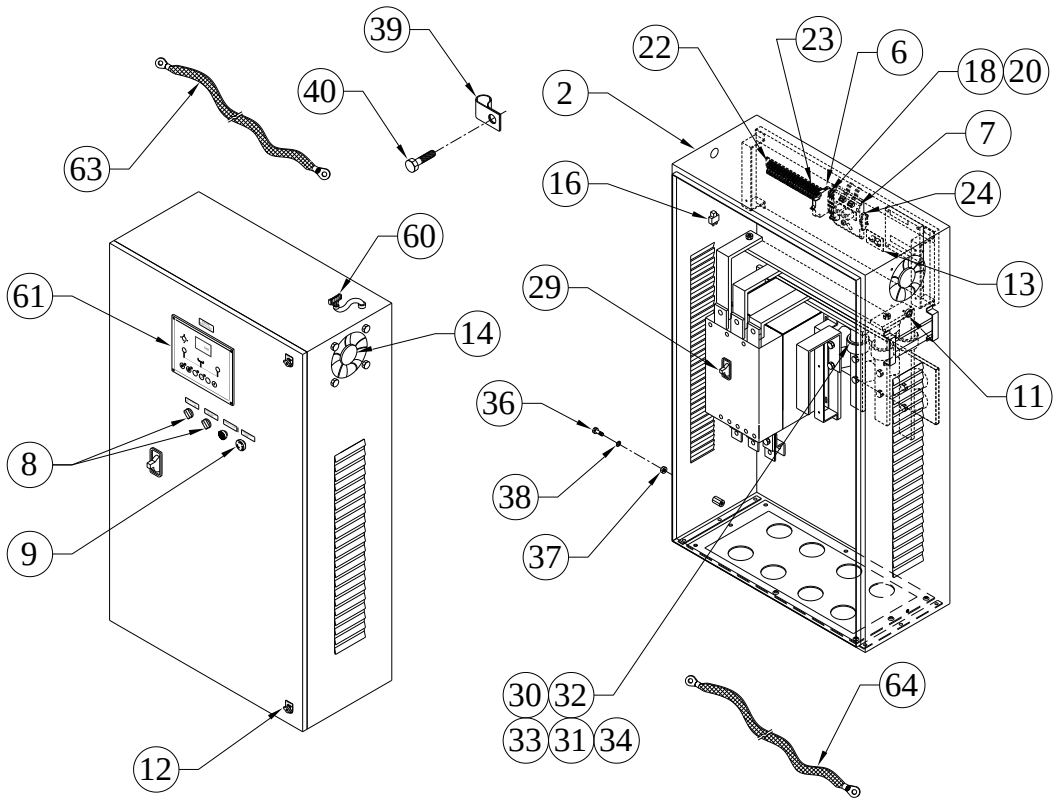

SR.NO.	PART NO.	DESCRIPTION	QTY.	REMARKS
36	4H.971.18.0.00	SET BOLT M8 (ROLLED BRASS) FOR PANEL EARTHING	2	
37	4H.971.19.0.00	M8 NUT ROLLED BRASS FOR PANEL EARTHING SHANTI PROJECT	4	
38	4H.971.23.0.00	M8 BRASS WASHER FOR PANEL EARTHING	4	
39	34.151.03.0.00	CLIP FOR FLEXIBLE PIPE WITH SLEEVE	2	
40	50.003.08.012.	SET SCREW - M8X1.25X12 - 8.8	2	
*41	F6.327.60.0.00	MISCELLANEOUS PARTS ASSEMBLY FOR STD.CONTROL PANEL	1	CONSISTING OF SR. NO. 42 TO 59
*42	2H.892.13.0.00	PVC CHNNEL SALZER MAKE 25 X 25 MM(LENGTH AS REQUIRED)	1	NOT ILLUSTRATED
43	4H.971.14.0.00	DIN RAIL WITH GREEN PASSIVATION(LENGTH AS REQUIRED)	0.5	NOT ILLUSTRATED
*44	4H.865.19.0.00	SPIRAL FOR WIRE BUNCH	1	NOT ILLUSTRATED

TITLE: - CONTROL PANEL 500 KVA 3PH.380/ 415V WITH DSE 7420 CONTROL UNIT	**GROUP: -** DV0.850.5

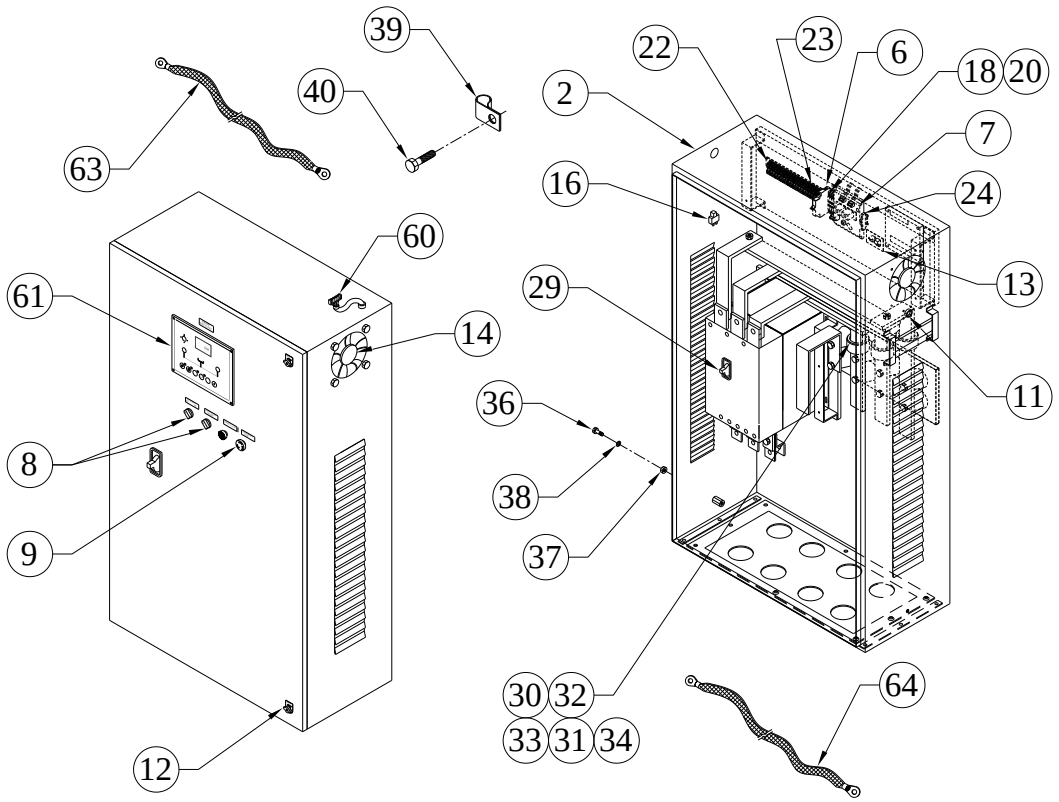

SR.NO.	PART NO.	DESCRIPTION	QTY.	REMARKS
*45	3H.905.06.0.00	TIE WRAP 100 MM LENGTH (QTY. AS REQUIRED)	50	NOT ILLUSTRATED
*46	2H.892.07.0.00	CONTROL PANEL FRONT DOOR STICKER (40 x 10) & LETTER HIGHT 4 MMANODIZED WHITE BACKGROUND BLACK LETTER)	1	NOT ILLUSTRATED
*47	2H.892.06.0.00	LEGENDS FOR CONTROL PANEL INSIDE PARTS(20 X 8) LETTER HIGHT 3MM,Polycarbonate,sign written)	1	NOT ILLUSTRATED
*48	2H.892.08.0.00	CONTROL PANEL SERIAL NAME PLATE	1	NOT ILLUSTRATED
*49	2H.892.14.0.00	PRINTED FERRULE WHITE SLIVE BLACK LETTER 1 SETFOR CONTROL PANEL	1	NOT ILLUSTRATED
*50	F6.327.15.0.00	ANODIZED/LAMINATED CONTROL DWG. PLATE 280 X150(24 V DC)	1	NOT ILLUSTRATED
*51	F6.900.38.0.00	PIN TYPE LUGS 1.5SQ.MM. DOWEL MAKE	10	NOT ILLUSTRATED

TITLE: - CONTROL PANEL 500 KVA 3PH.380/ 415V WITH DSE 7420 CONTROL UNIT	**GROUP:** - DV0.850.5

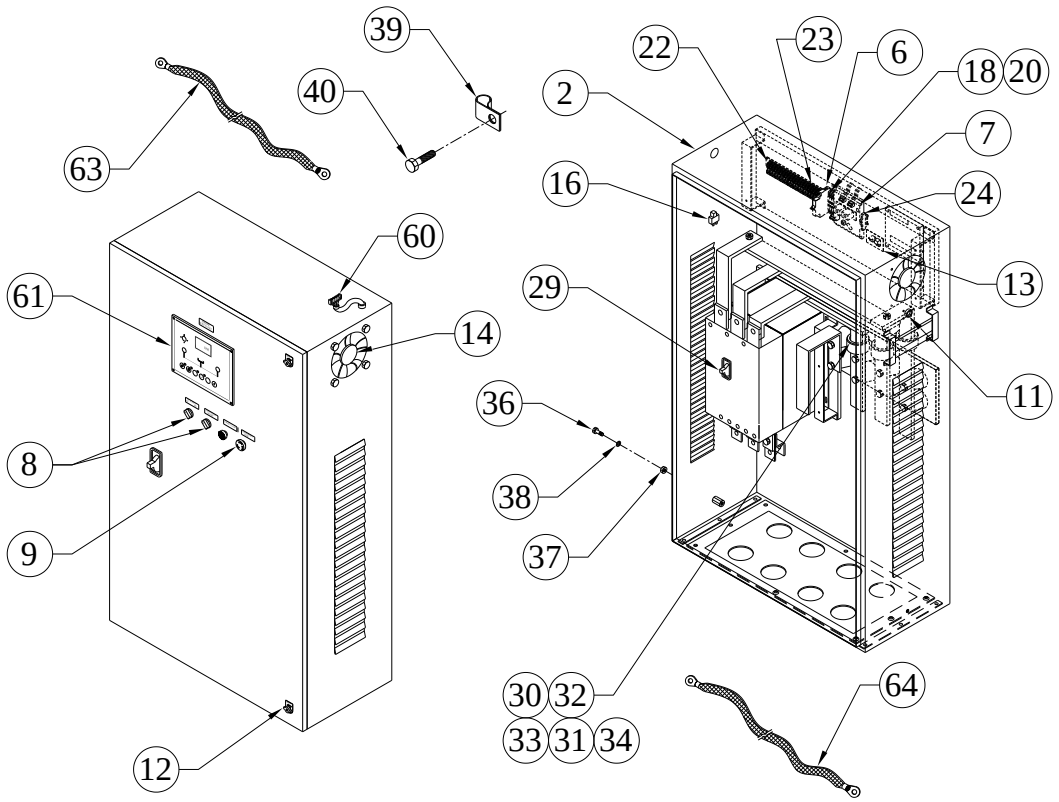

SR.NO.	PART NO.	DESCRIPTION	QTY.	REMARKS
*52	F6.900.39.0.00	PIN TYPE LUGS 1SQ.MM. DOWEL MAKE	50	NOT ILLUSTRATED
*53	2H.892.19.0.00	DOWELL MAKE PIN TYPE LUG 4 SQ.MM(AS REQUIRED)	10	NOT ILLUSTRATED
*54	F6.900.37.0.00	U TYPE LUGS 1SQ.MM. DOWEL MAKE	5	NOT ILLUSTRATED
*55	F6.900.25.0.00	O TYPE LUG. 4.0 SQ.MM ID-5 DOWELL MAKE	6	NOT ILLUSTRATED
*56	4H.971.09.0.00	RUBBER GASKET(SELF ADESIVE 20X5 MM) FOR CONTROL PANEL DOOR & GLAND PLATE	4	NOT ILLUSTRATED
*57	4H.971.12.0.00	RUBBER GROMET 25 MM DIA	1	NOT ILLUSTRATED
*58	2H.892.16.0.00	RUBBUR GROMET FOR 40 MM HOLE	3	NOT ILLUSTRATED
*59	4H.971.13.0.00	FEVI QUICK	20	NOT ILLUSTRATED

TITLE: - CONTROL PANEL 500 KVA 3PH.380/ 415V WITH DSE 7420 CONTROL UNIT	**GROUP: -** DV0.850.5

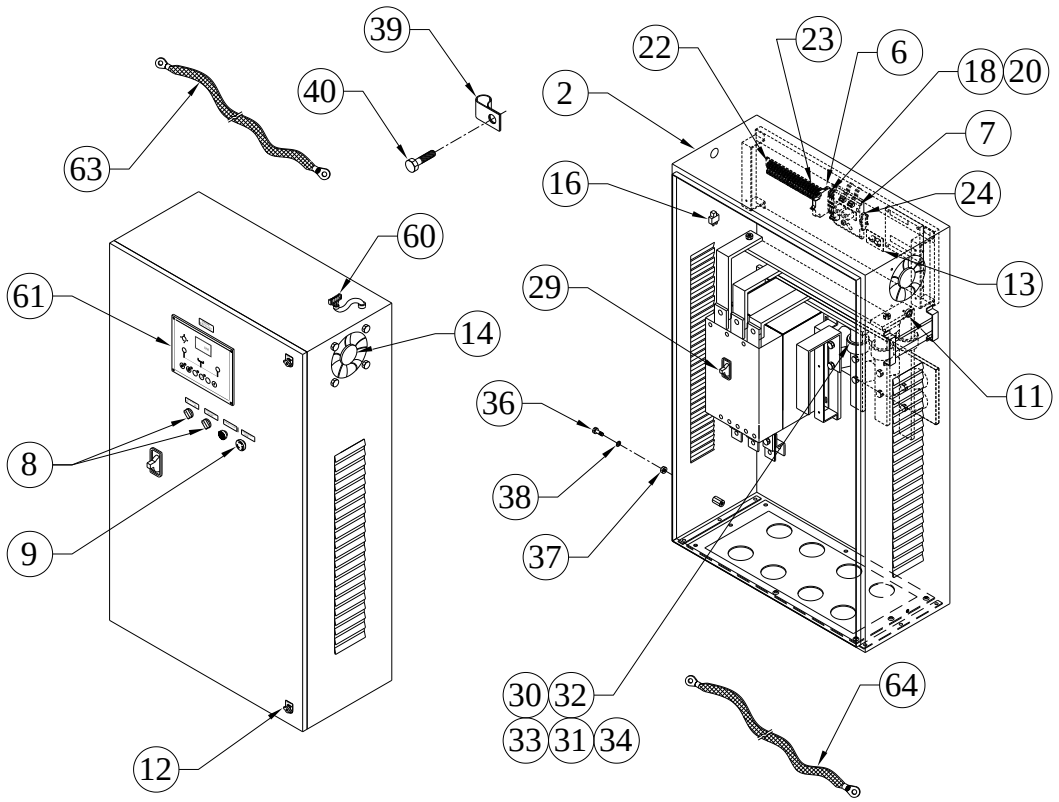

SR.NO.	PART NO.	DESCRIPTION	QTY.	REMARKS
60	4H.971.16.0.00	POWER MATE CONNECTOR 4 PIN (MALE CONNECTOR FEMALE PINS)	1	
61	DV0.812.12.0.00	DSE 7420 CONTROLLER	1	
*62	DV0.812.13.0.00	DSE 2131 RATIOMETRIC INPUT EXPANSION MODULE	1	NOT ILLUSTRATED
63	F6.872.05.0.00	EARTHING CABLE, 19/3, 700 MM LENGTH, 10 ID, 35 SQMM LUGS AT BOTH SIDE	1	
64	KV2.901.01.0.00	EARTHING CABLE, 25/3, 1100 MM LENGTH, 10 ID, 50 SQMM LUGS AT BOTH SIDE	1	

TITLE: - CRANK CASE	**GROUP:** - DV0.001

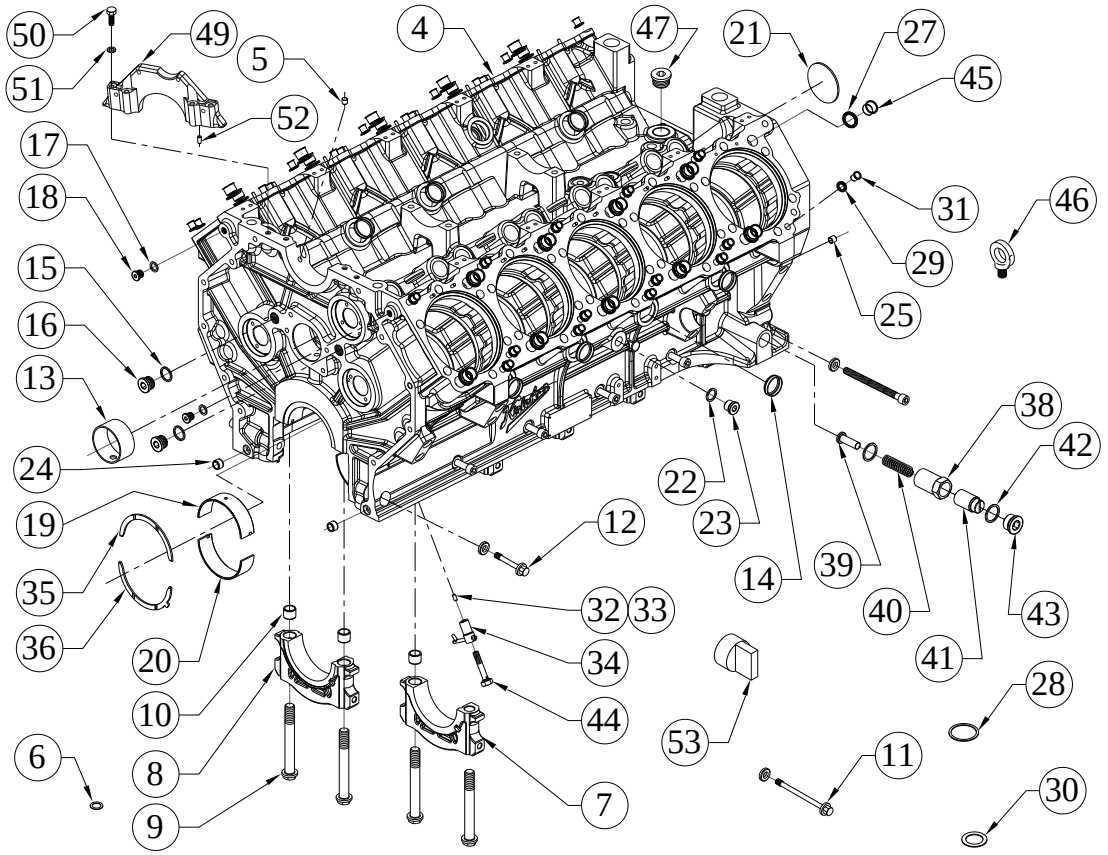

SR.NO.	PART NO.	DESCRIPTION	QTY.	REMARKS
*1	DV0.001.30.0.00	CRANK CASE ASSEMBLY	1	CONSISTING OF SR. NO. 2, 26 TO 37 & 44 TO 47
*2	DV0.001.20.0.00	CRANK CASE SUB-ASSEMBLY	1	CONSISTING OF SR. NO. 3 & 15 TO 25
*3	DV0.001.10.0.00	CRANK CASE SUB-ASSEMBLY	1	CONSISTING OF SR. NO. 4 TO 14
4	DV0.001.01.0.00	CRANKCASE (MACHINED)	1	NOT SUPPLIED LOOSE
5	DV0.001.27.0.00	PLUG (CRANKCASE OIL HOLE)	1	
6	DV0.001.26.0.00	WASHER FOR CRANKCASE PLUG	2	
7	DV0.001.07.0.00	MAIN BEARING CAP INTERMEDIATE	5	NOT SUPPLIED LOOSE
8	DV0.001.02.0.00	MAIN BEARING CAP(FWE)	1	NOT SUPPLIED LOOSE
9	DV0.001.03.0.00	BOLT (BEARING CAP)	12	
10	DV0.001.04.0.00	HOLLOW DOWEL(FOR BEARING CAP BOLT)	7	

TITLE: - CRANK CASE	**GROUP:** - DV0.001

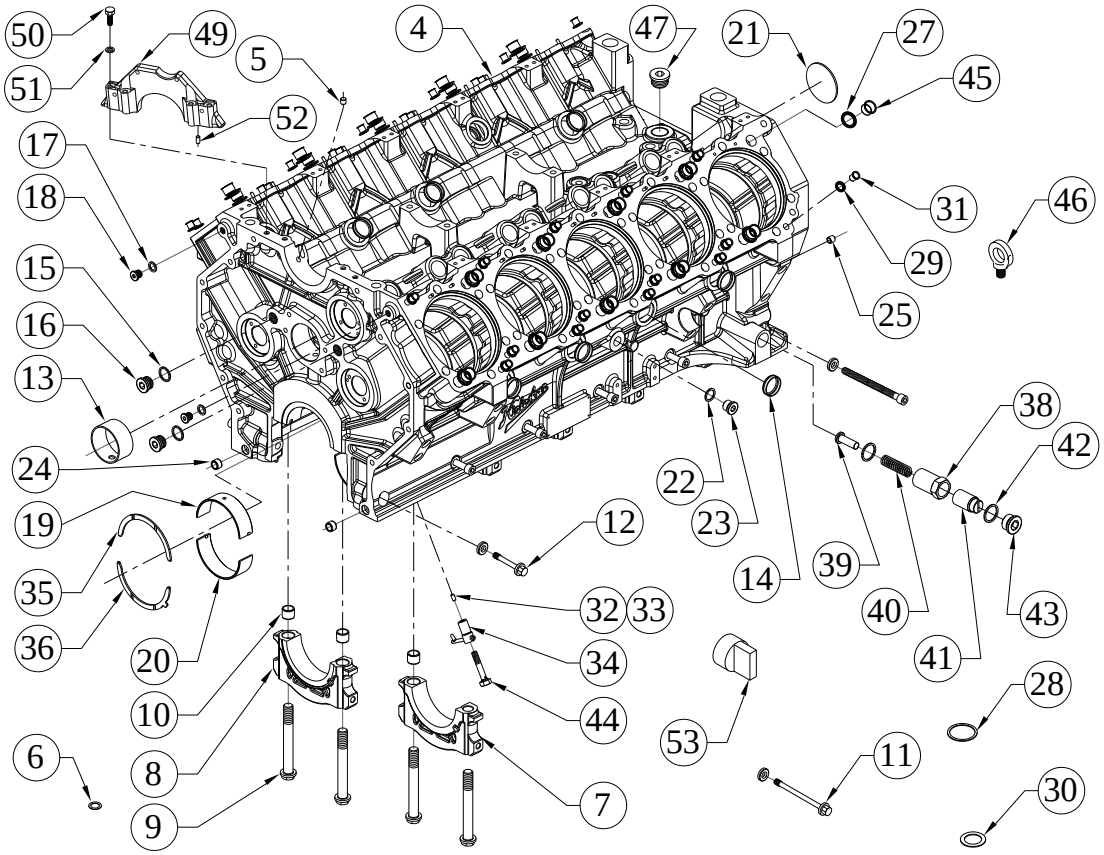

SR.NO.	PART NO.	DESCRIPTION	QTY.	REMARKS
11	DV0.001.42.0.00	M.B. CROSS BOLT (LONG)	1	
12	DV0.001.43.0.00	M.B. CROSS BOLT (SHORT)	11	
13	DV0.001.15.0.00	CAM BUSH	6	
14	F6.001.58.0.00	SEALING CAP.(40 DIN 443)	17	
15	50.508.27.000.	COPPER WASHER (24X29)	2	
16	DV0.001.16.0.00	CORE PLUG HEX. SOCKET (M24X2)	2	
17	50.508.12.000.	COPPER WASHER (14X20)	2	
18	50.610.14.000.	CORE PLUG-HEXAGONAL SOCKET HEAD(DIN-908)	2	
19	DV0.001.11.0.00	MAIN BEARING TOP (STD)	6	NOT SUPPLIED LOOSE
20	DV0.001.12.0.00	MAIN BEARING BOTTOM (STD)	6	NOT SUPPLIED LOOSE
21	DV0.001.25.0.00	DISH PLUG (80DIA)	1	
22	50.508.19.000.	COPPER WASHER (20X26)	2	
23	50.610.20.000.	CORE PLUG HEXAGONAL SOCKET HEAD(DIN 908)	2	
24	34.001.23.0.00	DOWEL FOR GEAR CASING	2	
25	T1.001.12.0.00	DOWEL DIA 18 (FEW)	2	

TITLE: - CRANK CASE	**GROUP:** - DV0.001

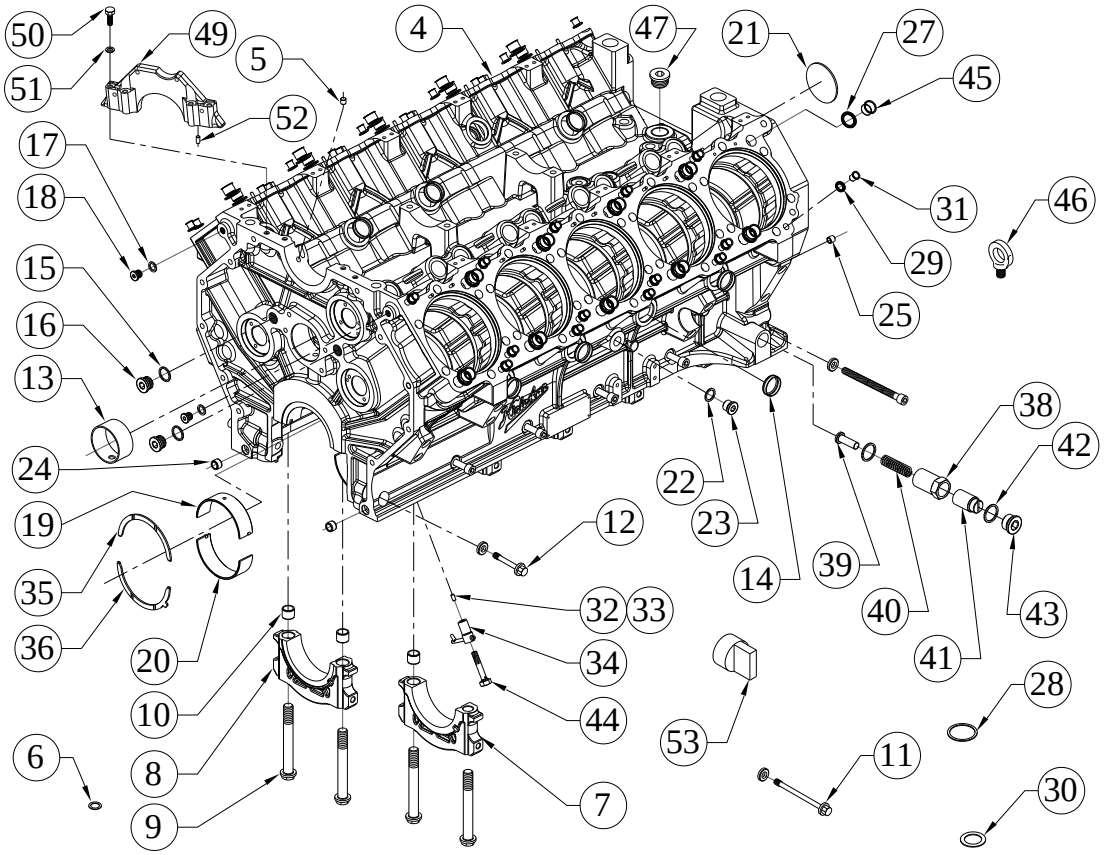

SR.NO.	PART NO.	DESCRIPTION	QTY.	REMARKS
26	DV0.001.60.0.00	CRANKCASE WITH CAM BUSH	1	
27	DV0.001.22.0.00	GROMMET FOR 22DIA FERRULE	20	
28	DV0.001.82.0.00	GROMMET SUPPORT WASHER FOR DIA 31.5	20	
29	DV0.001.21.0.00	GROMMET FOR 12 DIA FERRULE	30	
30	DV0.001.81.0.00	GROMMET SUPPORT WASHET 20.2	30	
31	DV0.001.23.0.00	FERRULE (12DIA)	30	
32	50.401.07.012.	DOWEL PIN	10	
33	50.401.06.012.	DOWEL	20	
34	DV0.001.05.0.00	NOZZLE BODY (FOR OIL SPARY NOZZLE)	10	
35	DV0.001.13.0.00	THRUST WASHER (TOP)	2	
36	DV0.001.14.0.00	THRUST WASHER (BOTTOM)	2	
*37	DV0.001.50.0.00	RELIEF VALVE ASSLY.	1	CONSISTING OF SR. NO.38 TO 43
38	DV0.001.34.0.00	RELIEF VALVE BODY	1	NOT SUPPLIED LOOSE
39	DV0.001.32.0.00	PLUNGER (FOR RELIEF VALVE)	1	NOT SUPPLIED LOOSE

TITLE: - CRANK CASE	**GROUP:** - DV0.001

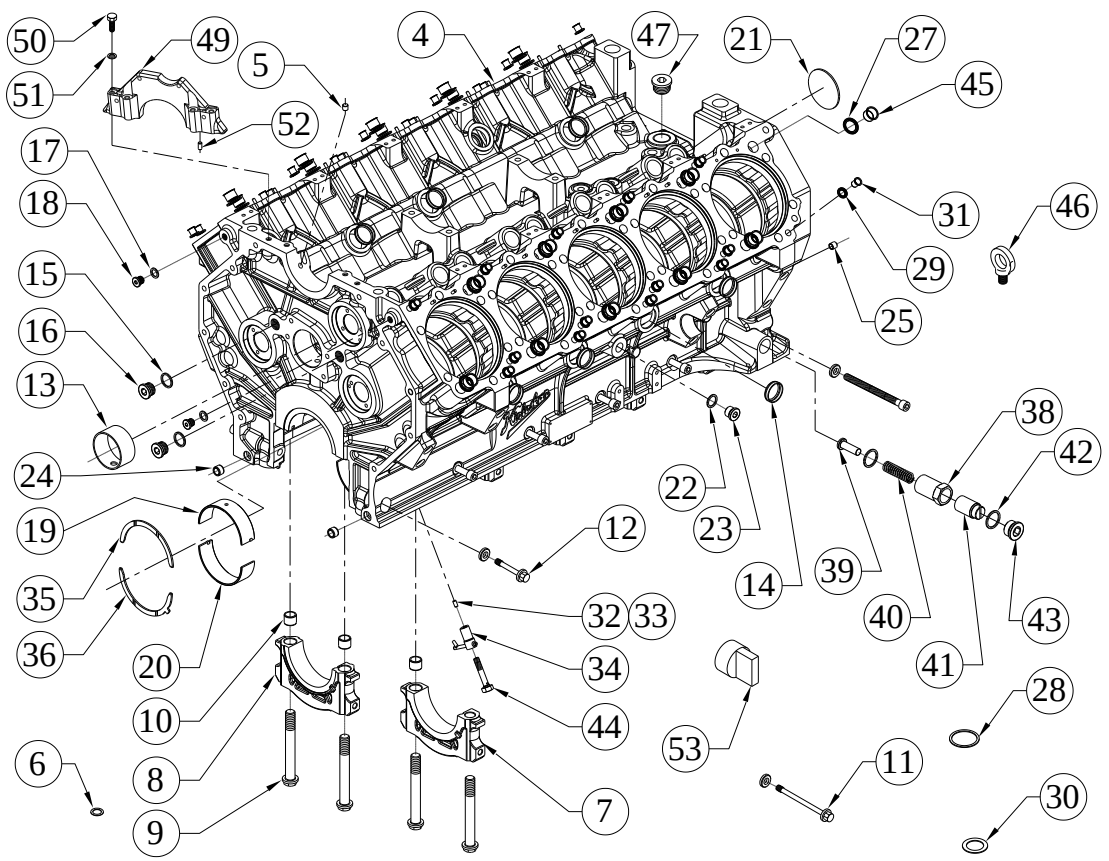

SR.NO.	PART NO.	DESCRIPTION	QTY.	REMARKS
40	DV0.001.31.0.00	SPRING	1	NOT SUPPLIED LOOSE
41	DV0.001.33.0.00	SETTING SCREW (FOR RELIEF VALVE)	1	
42	50.508.35.000.	COPPER WASHER (30X38)	2	
43	DV0.001.18.0.00	CORE PLUG HEX. SOCKET M30X1.5	1	
44	DV0.001.06.0.00	SPECIAL BANJO BOLT(FOR OIL SPAY NOZZLE)	10	
45	DV0.001.24.0.00	FERRULE (22DIA)	20	
46	DV0.001.08.0.00	LIFTING HOOK	4	
47	DV0.001.17.0.00	CORE PLUG HEX. SOCKET M33X3.5	1	
*48	DV0.001.70.0.00	FUEL PUMP CAP ASSLY	1	CONSISTING OF SR. NO.49 TO 52
49	DV0.019.06.9.00	FUEL PUMP CAP (SEMIFINISH)	1	
50	50.003.08.070.	SET SCREW	4	
51	50.506.08.000.	PLAIN MACHINED WASHER - M8	4	
52	50.401.08.012.	DOWEL	2	
53	DV0.001.47.0.00	SEALING CAP SHORT (FOR MB CAP SIDE BOLT)	10	NOT SUPPLIED LOOSE

TITLE: - CRANK SHAFT (WITH 3 GROOVE PULLEY)	**GROUP:** - DV0.003.1

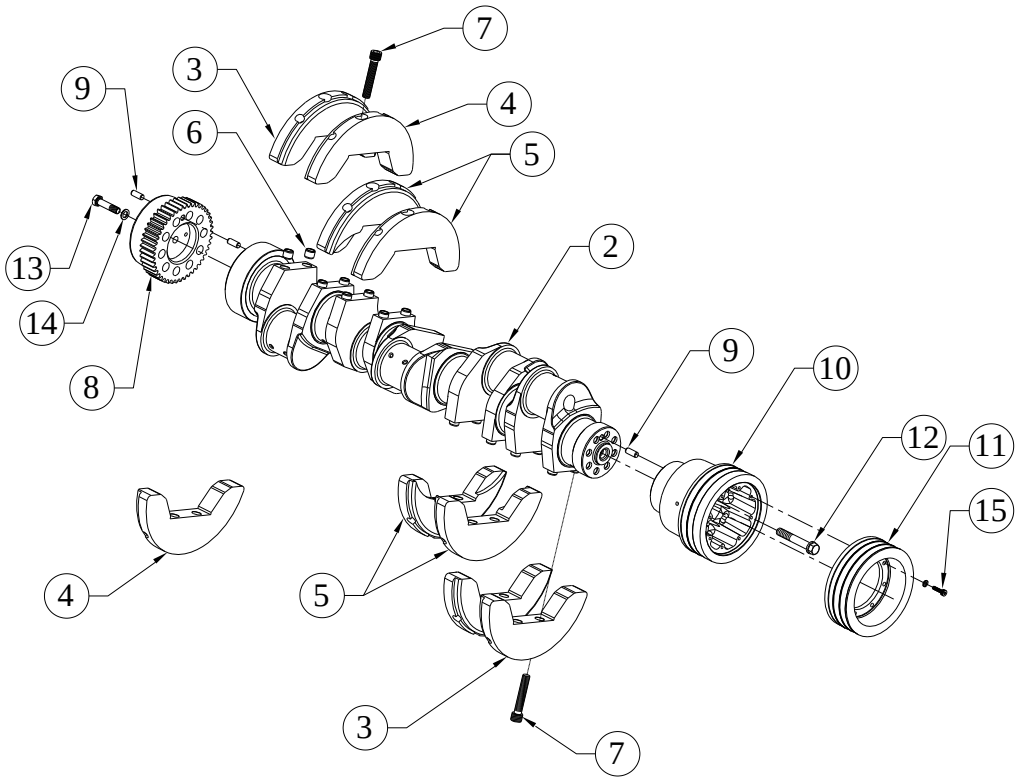

SR.NO.	PART NO.	DESCRIPTION	QTY.	REMARKS
*1	DV0.003.10.0.00	CRANKSHAFT SUB ASSLY.	1	CONSISTING OF SR. NO. 2 TO 7
2	DV0.003.01.0.00	CRANKSHAFT	1	NOT SUPPLIED LOOSE
3	DV0.003.03.0.00	BALANCE WEIGHT	2	NOT SUPPLIED LOOSE
4	DV8.003.06.0.00	BALANCE WEIGHT FOR WEB 2&7	2	NOT SUPPLIED LOOSE
5	DV0.003.05.0.00	BALANCE WEIGHT (FOR WEBS 3,4,7,8)	4	NOT SUPPLIED LOOSE
6	DV0.003.04.0.00	DOWEL	16	
7	50.076.16.090	ALLEN SCREW	16	
8	DV8.003.12.0.00	CRANK SHAFT GEAR	1	NOT SUPPLIED LOOSE
9	50.401.10.030	DOWEL PIN	3	
10	DV0.003.12.0.00	CRANK PULLEY	1	
11	DV2.003.13.0.00	CRANK PULLEY (200 PCD & SPB PROFILE)	1	

TITLE: - CRANK SHAFT (WITH 3 GROOVE PULLEY)	**GROUP: -** DV0.003.1

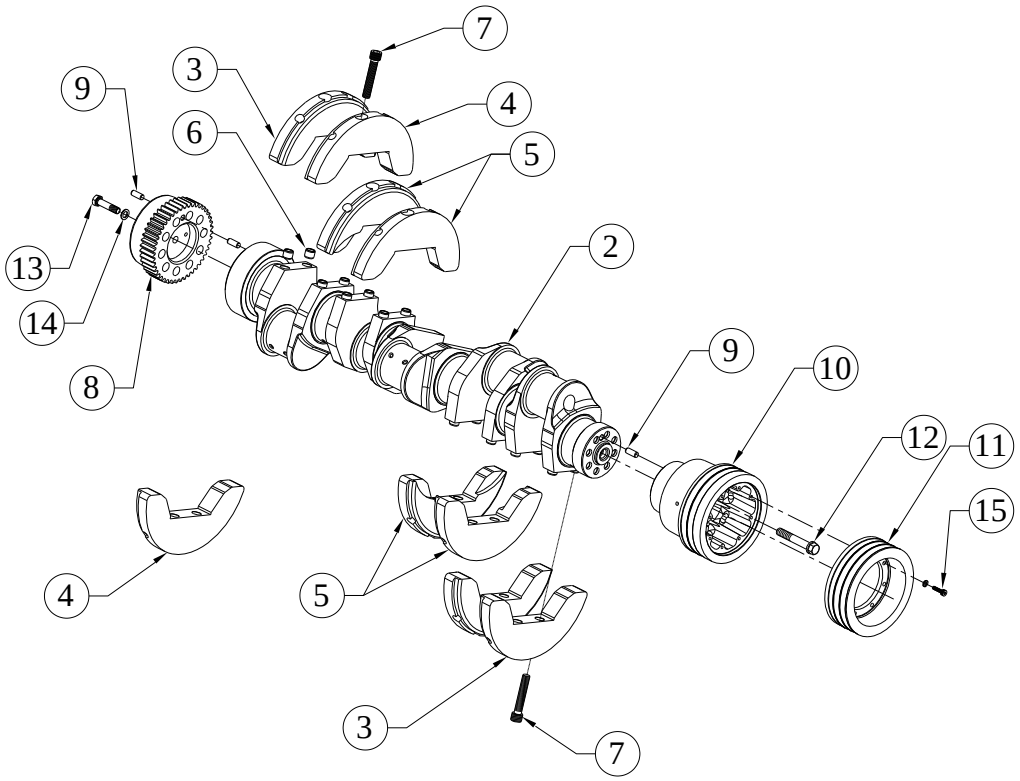

SR.NO.	PART NO.	DESCRIPTION	QTY.	REMARKS
12	DV0.003.14.0.00	CRANK PULLEY BOLT	8	
13	50.002.14.060	SET BOLT - M14X2X60 - 8.8	1	
14	50.506.14.000	PLAIN MACHINED WASHER - M14	1	
15	50.011.08.035	SOCKET HEAD SCREW - M8X1.25X35 - 8.8	8	

TITLE: - CYLINDER HEAD	**GROUP:** - DV0.007

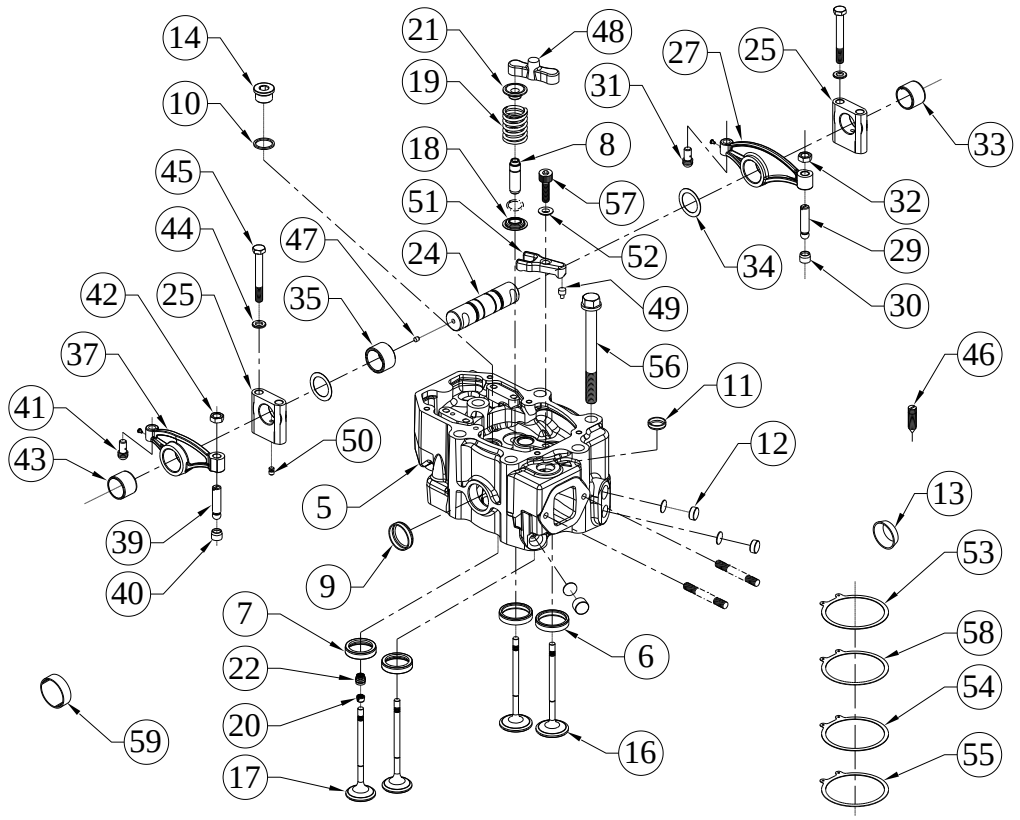

SR.NO.	PART NO.	DESCRIPTION	QTY.	REMARKS
*1	DV0.007.90.0.00	CYLINDER HEAD ASSEMBLY	1	CONSISTING OF SR. NO. 2 & 51 TO 57
*2	DV0.007.80.0.00	CYLINDER HEAD ASSLY (WITH ROCKER LEVER ASSLY)	1	CONSISTING OF SR. NO. 3,23 & 48 TO 50
*3	DV0.007.70.0.00	CYL HEAD SUB ASSEMBLY (WITH SPRING & VALVE)	1	CONSISTING OF SR. NO. 4 & 15 TO 22
*4	DV0.007.20.0.00	SUB ASSLY OF CYLINDER HEAD (WITH VALVE SEAT & VALVE GUIDE)	1	CONSISTING OF SR. NO. 5 TO 14
5	DV0.007.25.0.00	CYLINDER HEAD (SAROJ IRON)	1	NOT SUPPLIED LOOSE
6	DV0.007.06.9.00	INLET VALVE SEAT INSERT (SEMIFINISH)	2	
7	DV0.007.07.9.00	EXHAUST VAVE SEAT INSERT (SEMIFINISH)	2	
8	DV0.007.82.9.00	VALVE GUIDE - SEMIFINISH	4	
9	F6.001.58.0.00	SEALING CAP.(40 DIN 443)	2	

TITLE: - CYLINDER HEAD	**GROUP:** - DV0.007

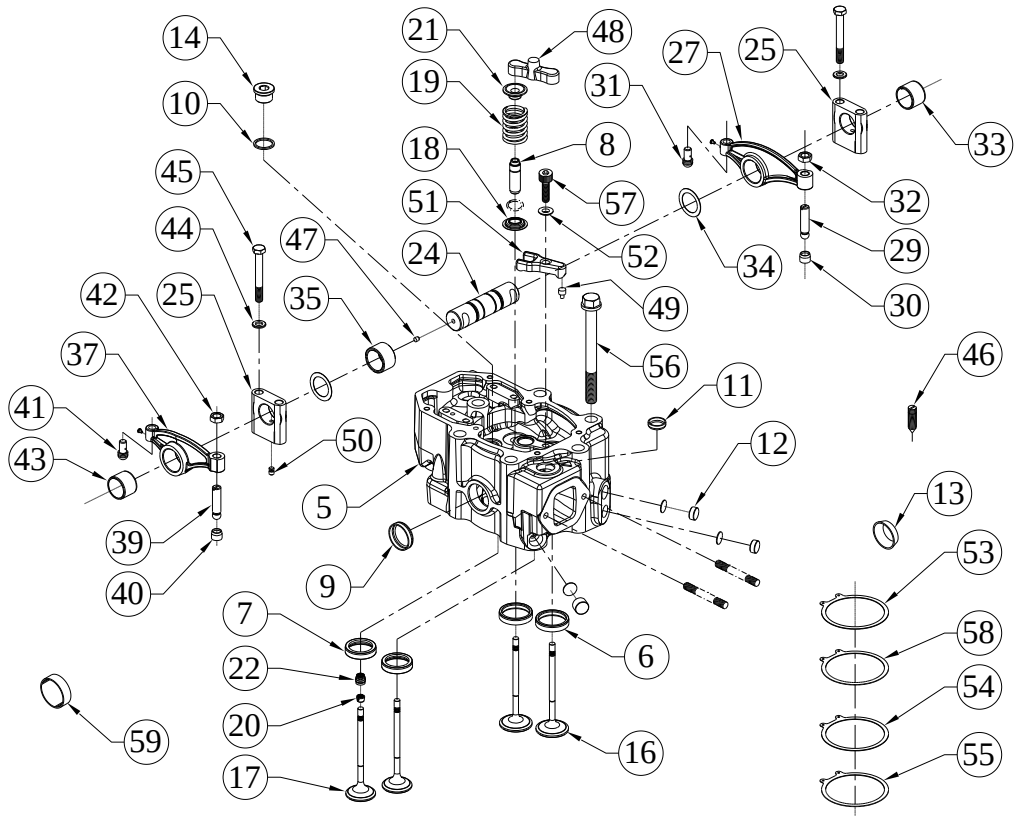

SR.NO.	PART NO.	DESCRIPTION	QTY.	REMARKS
10	50.508.27.000.	COPPER WASHER (24X29)	1	
11	DV0.007.71.0.00	SEALING CAP (FOR DIA 25)	1	
12	DV0.007.03.0.00	CORE PLUG (20 MM DIA)	2	
13	DV0.007.09.0.00	CORE PLUG (DIA 32 MM)	1	
14	DV0.001.16.0.00	CORE PLUG HEX. SOCKET (M24X2)	1	
*15	DV0.007.45.0.00	INLET & EXHAUST VALVE PAIR FOR DV SERIES	1	CONSIST OF SR. NO. 16, 17
16	DV0.007.04.0.00	INLET VALVE	2	
17	DV0.007.05.0.00	EXHAUST VALVE	2	
18	34.013.13.0.00	CUP FOR VALVE SPRING.	4	
19	02.022.13.0.00	VALVE SPRING	4	
20	02.022.28.0.00	VALVE COLLET(3-GROOVE)	8	
21	02.022.11.0.00	VALVE CUP	4	
22	06.631.02.0.00	VALVE SEAL	4	
*23	DV0.007.60.0.00	ASSLY. ROCKER LEVER	1	CONSISTING OF SR. NO. 24 TO 26, 34 TO 36 & 44 TO 47
24	DV0.007.22.0.00	ROCKER SHAFT	1	

TITLE: - CYLINDER HEAD	**GROUP:** - DV0.007

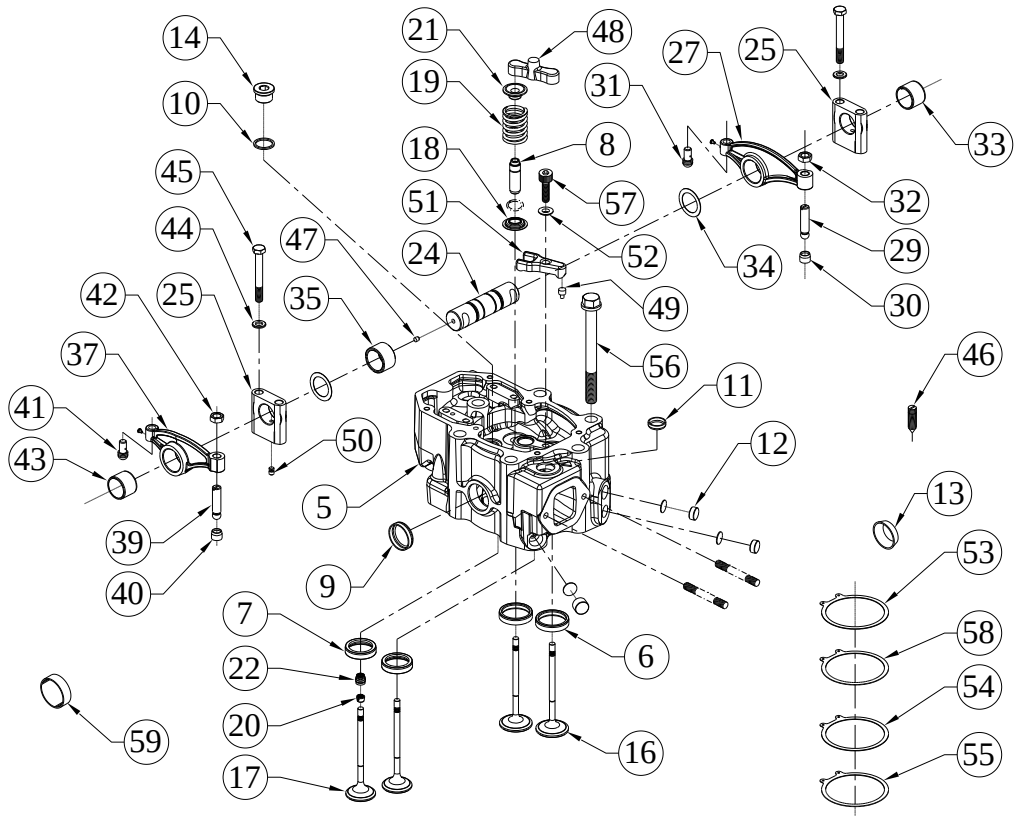

SR.NO.	PART NO.	DESCRIPTION	QTY.	REMARKS
25	DV0.007.24.0.00	ROCKER SUPPORT	2	
*26	DV0.007.40.0.00	INLET LEVER (SUB ASSLY.)	1	CONSISTING OF SR. NO. 27, 28 & 31 TO 33
27	DV0.007.13.0.00	ROCKER LEVER INLET (MACHINING)	1	
*28	DV0.007.30.0.00	ROCKER LEVER ADJ. SCREW ASSLY.	1	CONSISTING OF SR. NO. 29, 30
29	DV0.007.15.0.00	ROCKER LEVER ADJ. SCREW	1	
30	DV0.007.16.0.00	ROCKER LEVER ADJ.SPIGOT	1	
31	DV0.007.17.0.00	TOE (FOR ROCKER LEVER)	1	
32	DV0.007.18.0.00	NUT (FOR ROCKER COVER ADJ. SCREW)	1	
33	DV0.007.21.0.00	BUSH (ROCKER LEVER)	1	
34	F6.007.12.0.00	WASHER.	4	
35	DV0.007.19.0.00	SPACER BETWEEN LEVER	1	
*36	DV0.007.50.0.00	EXHAUST LEVER (SUB ASSLY.)	1	CONSISTING OF SR. NO. 37, 38 & 41 TO 43

TITLE: - CYLINDER HEAD	**GROUP:** - DV0.007

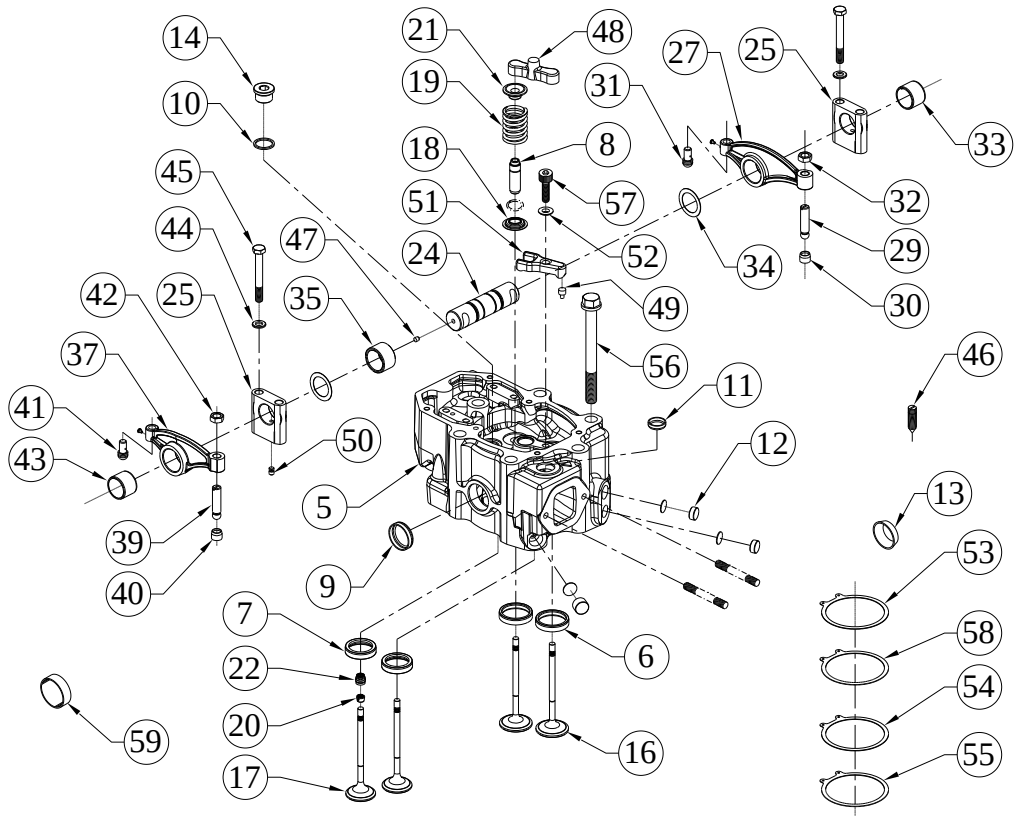

SR.NO.	PART NO.	DESCRIPTION	QTY.	REMARKS
37	DV0.007.14.0.00	ROCKER LEVER EXHAUST (MACHING)	1	
*38	DV0.007.30.0.00	ROCKER LEVER ADJ. SCREW ASSLY.	1	CONSISTING OF SR. NO. 39, 40
39	DV0.007.15.0.00	ROCKER LEVER ADJ. SCREW	1	
40	DV0.007.16.0.00	ROCKER LEVER ADJ.SPIGOT	1	
41	DV0.007.17.0.00	TOE (FOR ROCKER LEVER)	1	
42	DV0.007.18.0.00	NUT (FOR ROCKER COVER ADJ. SCREW)	1	
43	DV0.007.21.0.00	BUSH (ROCKER LEVER)	1	
44	50.506.10.000.	PLAIN MACHINED WASHER - M10	4	
45	50.002.10.080.	SET BOLT - M10X1.5X80 - 8.8	4	
46	50.021.04.005.	SLOTTED HEAD GRUB SCREW-4*5 (COARSE PITCHES)	2	
47	DV0.007.37.0.00	PLUG FOR ROCKER SHAFT (2 PER SHAFT)	2	
48	DV0.007.26.0.00	BRIDGE (FOR ROCKER LEVER)	2	
49	DV0.007.34.0.00	BUTTON (FOR NOZZLE CLAMP)	1	

TITLE: - CYLINDER HEAD	**GROUP:** - DV0.007

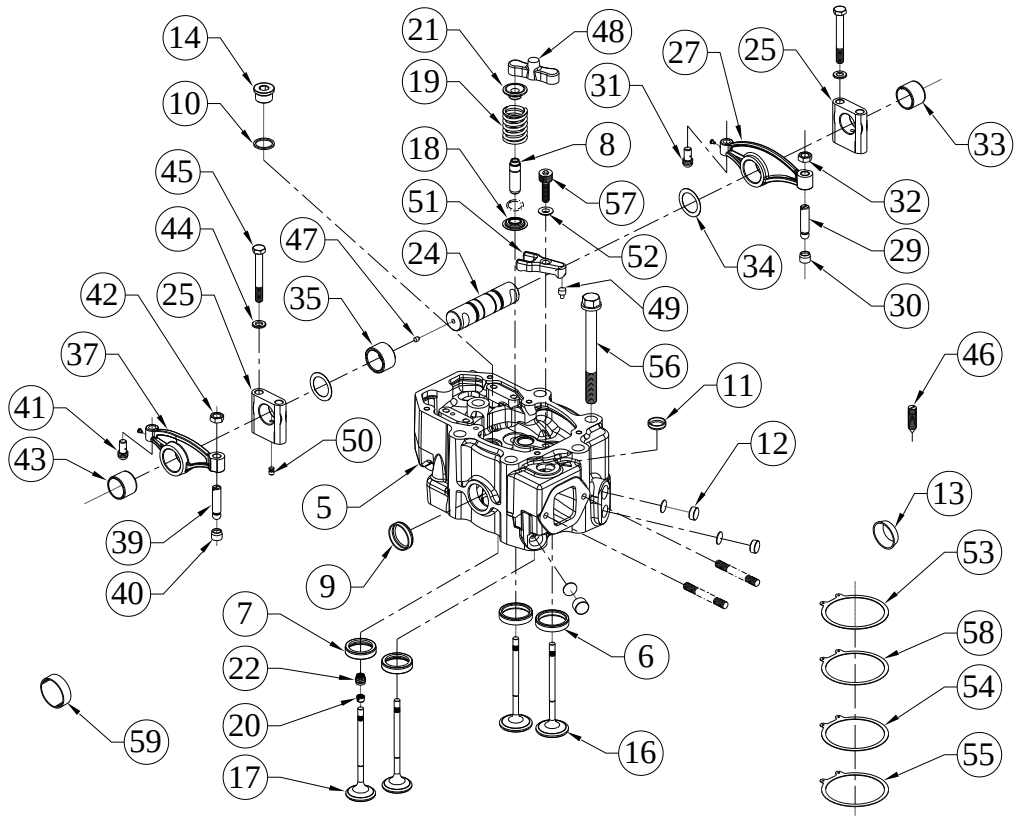

SR.NO.	PART NO.	DESCRIPTION	QTY.	REMARKS
50	DV0.007.36.0.00	OIL METERING PLUG (FOR ROCKER SUPPORT)	1	
51	DV0.007.33.0.00	NOZZLE CLAMP	1	
52	DV0.007.35.0.00	CUP WASHER (FOR NOZZLE CLAMP)	1	
53	DV0.007.11.0.00	CYLINDERHEAD GASKET (1.2 THICK)	1	
54	DV0.007.42.0.00	CYLINDER HEAD GASKET (1 THK)	1	
55	DV0.007.41.0.00	CYLINDER HEAD GASKET (0.85 THK)	1	
56	DV0.007.02.0.00	CYLINDER HEAD BOLT	6	
57	50.011.10.040.	CAP SCREW	1	
58	DV0.007.43.0.00	CYLINDER HEAD GASKET (1.15 THK)	1	
59	DV0.007.46.0.00	SEALING CAP	2	

TITLE: - CYLINDER LINER	**GROUP:** - DV0.002

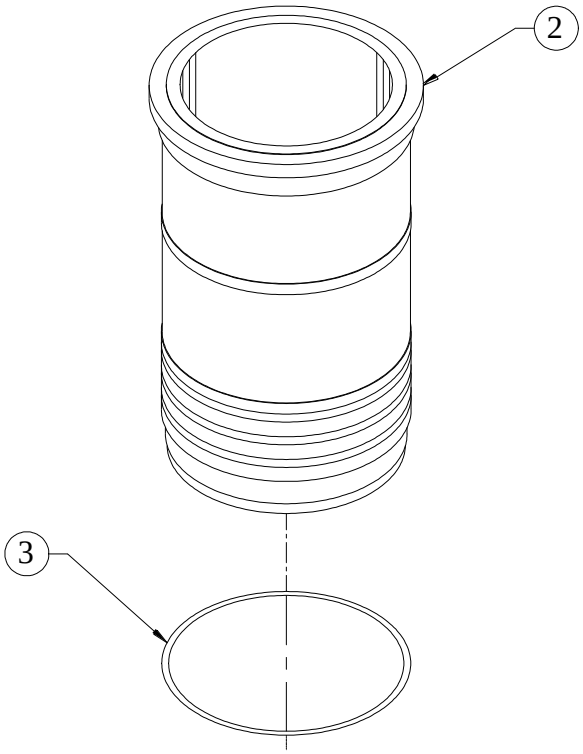

SR.NO.	PART NO.	DESCRIPTION	QTY.	REMARKS
*1	DV0.002.10.0.00	CYLINDER LINER ASSEMBLY	1	CONSISTING OF SR.NO. 2 TO 3
2	DV0.002.01.0.00	CYLINDER LINER	1	
3	DV0.002.02.0.00	O RING (FOR CY LINER)	3	

TITLE: - DELIVERY TUBE	**GROUP:** - DV0.042

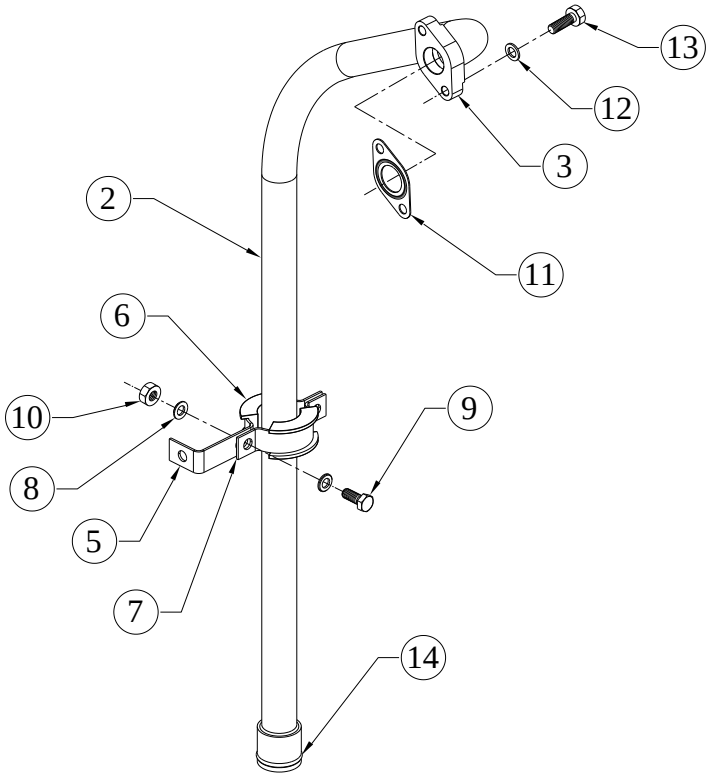

SR.NO.	PART NO.	DESCRIPTION	QTY.	REMARKS
*1	DV0.042.10.0.00	DELIVERY TUBE (SUB ASSLY)	1	CONSISTING OF SR. NO. 2,3
2	DV0.042.01.0.00	DELIVERY TUBE	1	
3	DV0.042.02.0.00	FLANGE(FOR DELIVERY TUBE)	1	
*4	DV0.042.30.0.00	DELIVERY TUBE CLAMP ASM	1	CONSISTING OF SR. NO. 5 TO 10
5	DV0.042.07.0.00	CLAMP (FOR OIL DELIVERY TUBE)	1	
6	DV0.042.09.0.00	RUBBER BUSH(FOR OIL DELIVERY TUBE)	2	
7	DV0.042.08.0.00	STRAP (FOR OIL DELIVERY TUBE)	1	
8	50.506.08.000.	PLAIN MACHINED WASHER - M8	5	
9	50.003.08.020.	SET SCREW - M8X1.25X20 - 8.8	1	
10	50.006.08.000.	NUT- M8X1.25 - GR.8	2	
11	DV0.042.03.0.00	JOINT (FOR DELIVERY TUBE FLANGE)	1	
12	50.506.08.000.	PLAIN MACHINED WASHER - M8	2	

TITLE: - DELIVERY TUBE	**GROUP:** - DV0.042

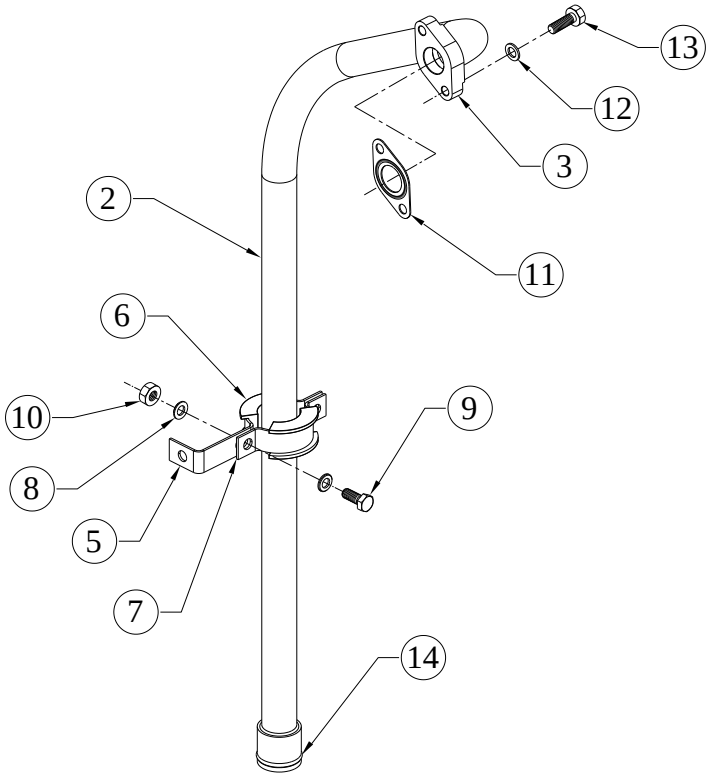

SR.NO.	PART NO.	DESCRIPTION	QTY.	REMARKS
13	50.003.08.030.	SET SCREW - M8X1.25X30 - 8.8	4	
14	DV0.042.05.0.00	O RING (DIA. 36) FOR LUB.OIL DELIVERY TUBE	1	

TITLE: - DV10 RADIATOR ASSEMBLY WITH EXPORT WORTHY PACKING BOX	**GROUP: -** DV0.031.43

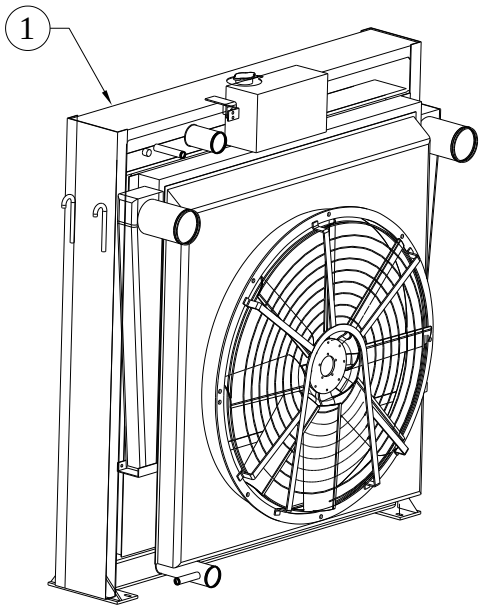

SR.NO.	PART NO.	DESCRIPTION	QTY.	REMARKS
1	DV0.031.43.0.PR	DV10 500KVA BANCO RADIATOR WITH CUT-OUT TYPE FAN GUARD	1	

TITLE: - ENGINE FOOT	**GROUP:** - DV0.034

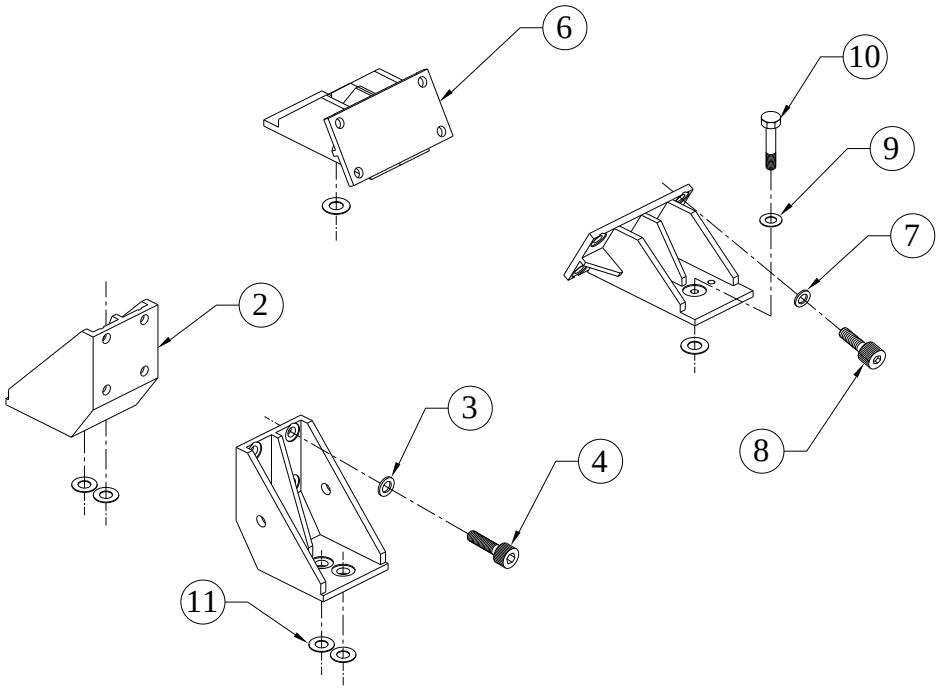

SR.NO.	PART NO.	DESCRIPTION	QTY.	REMARKS
*1	DV0.034.20.0.00	ENGINE MTG FOOT ASM (ON FLYWHEEL HSG)	2	CONSISTING OF SR. NO. 2 TO 4
2	DV0.034.02.0.00	ENGINE MTG. FOOT (ON GEAR CASING CUM BELL HSG)	1	
3	50.506.16.000	PLAIN MACHINED WASHER - M16	8	
4	50.076.16.035	SOCKET HEAD CAP SCREW-M16X35-12.9	4	
*5	DV0.034.30.0.00	ENGINE MTG FOOT ASM (PULLEY END SIDE)	2	CONSISTING OF SR. NO. 6 TO 10
6	DV0.034.03.0.00	ENGINE MTG. FOOT(PULLEY END)	1	
7	50.506.16.000	PLAIN MACHINED WASHER - M16	4	
8	50.076.16.050	SOCKET HEAD SCREW (DIN912 M16X50 -12.5)	4	
9	F6.508.03.0.00	HARD WASHER(12 ID)	1	
10	50.002.12.055	SET BOLT - M12X1.75X55 - 8.8	1	
11	DV0.034.04.0.00	FOOT MOUNTING WASHER (FOR DISPATCH)	4	

TITLE: - ENGINE WIRING HARNESS FOR DV0 GNESET CLOSE COUPLED (500 KVA WITH MCCB) WITH DSE 7420 UNIT	**GROUP:** - DV0.905.4

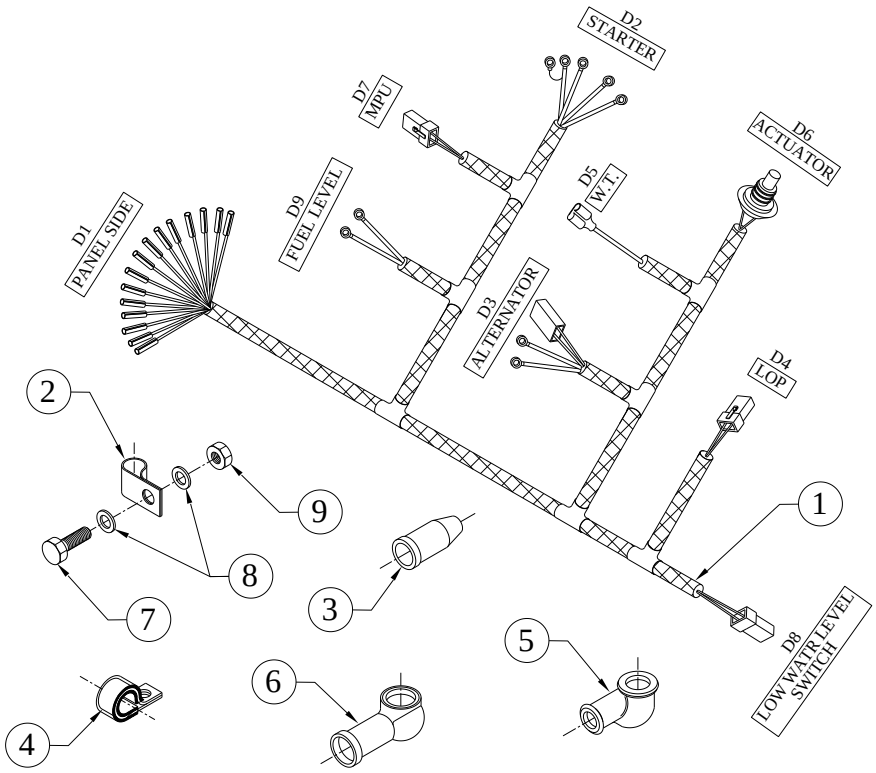

SR.NO.	PART NO.	DESCRIPTION	QTY.	REMARKS
1	DV0.905.40.0.PR	ENGINE WIRING HARNESS ASSEMBLY FOR DV0 GNESET CLOSE COUPLED (500 KVAWITH MCCB)WITH DSE 7420 UNIT	1	
2	34.151.03.0.00	CLIP FOR FLEXIBLE PIPE WITH SLEEVE	21	
3	3H.905.05.0.00	RUBBER SLEEVE FOR TEMP.SWITCH / SENSOR	1	
4	3H.905.02.0.00	CLIP 25 DIA FOR FLEXIBLE PIPE	5	
5	3H.905.01.0.00	RUBBER SLEEVE 16 DIA	2	
6	3H.905.03.0.00	RUBBER SLIVE 27 DIA	2	
7	50.003.08.020.	SET SCREW - M8X1.25X20 - 8.8	20	
8	50.506.08.000.	PLAIN MACHINED WASHER - M8	22	
9	50.006.08.000.	NUT- M8X1.25 - GR.8	2	

TITLE: - EXHAUST MANIFOLD	**GROUP:** - DV0.024

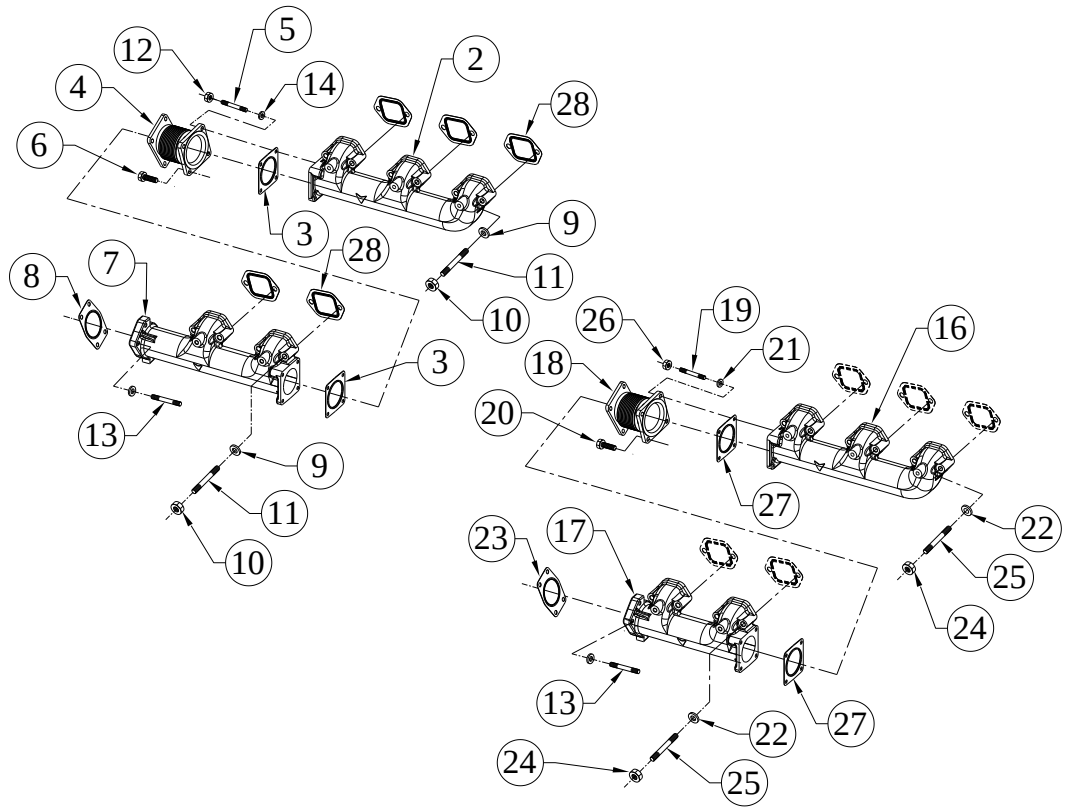

SR.NO.	PART NO.	DESCRIPTION	QTY.	REMARKS
*1	DV0.024.10.0.00	EXHUAST MANIFOLD ASSLY (L.H.S)	1	CONSISTING OF SR. NO. 2 TO 14
2	DV0.024.24.0.PR	EXHAUST MANIFOLD (L.H. 3 PORT)	1	
3	DV0.024.08.0.00	JOINT (BET.EXH. MANI. AND EXPA.BELLOW)	2	
4	DV0.024.05.0.00	EXPANSION BELLOW (FOR EXH. MANIFOLD)	1	
5	F6.377.11.0.00	STUD M8 (COPPER COATED)	4	
6	F6.381.05.0.00	SET SCREW M8X1.25X025 (COPPER COATED)	4	
7	DV0.024.25.0.PR	EXHAUST MANIFOLD (L.H. 2 PORT)	1	
8	DV0.024.06.0.00	JOINT (BET.EXH.MANI. AND ADAPTOR)	1	
9	50.506.10.000.	PLAIN MACHINED WASHER - M10	10	

TITLE: - EXHAUST MANIFOLD	**GROUP:** - DV0.024

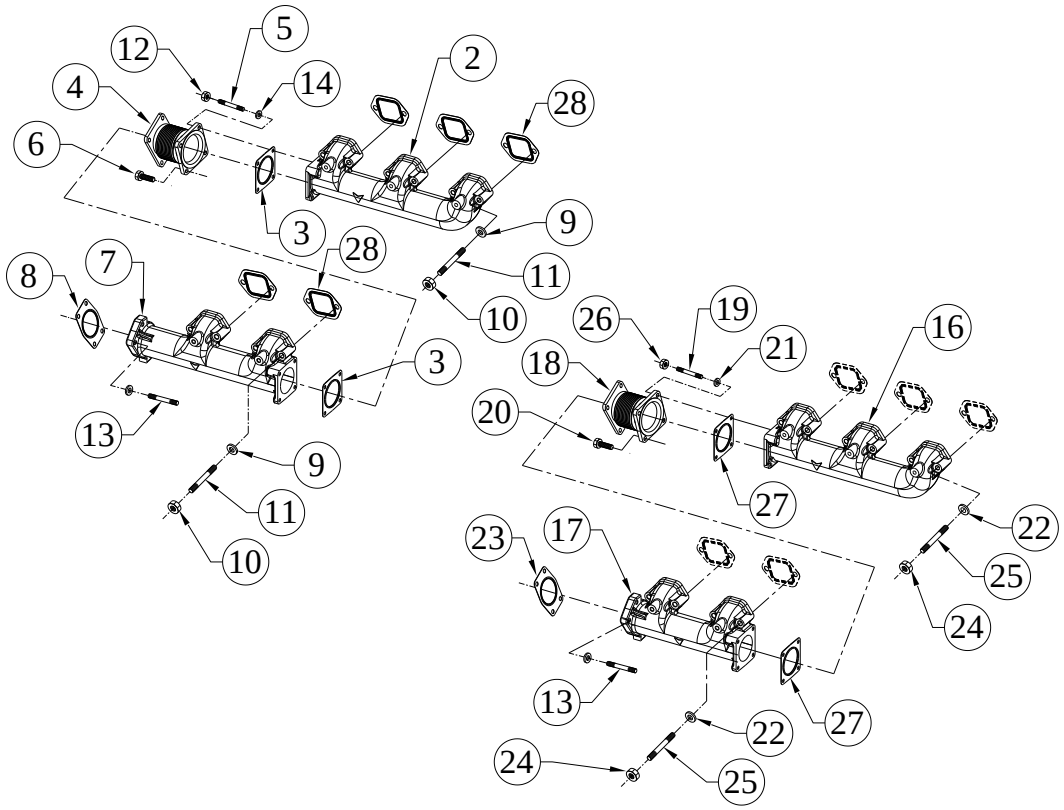

SR.NO.	PART NO.	DESCRIPTION	QTY.	REMARKS
10	DV0.024.18.0.00	SPECIAL NUT FOR EXHAUST MANIFOLD	10	
11	DV0.024.19.0.00	EXHAUST MANIFOLD STUD	10	
12	50.080.08.000.	NUT (SS) - M8x1.25	8	
13	50.010.10.030.	STUD - M10X1.5X30 - 8.8	4	
14	50.506.08.000.	PLAIN MACHINED WASHER - M8	8	
*15	DV0.024.20.0.00	EXHAUST MANIFOLD (R.H.S)	1	CONSISTING OF SR. NO. 16 TO 27
16	DV0.024.26.0.PR	EXHAUST MANIFOLD (R.H. 3 PORT)	1	
17	DV0.024.27.0.PR	EXHAUST MANIFOLD (R.H. 2 PORT)	1	
18	DV0.024.05.0.00	EXPANSION BELLOW (FOR EXH. MANIFOLD)	1	
19	F6.377.11.0.00	STUD M8 (COPPER COATED)	4	
20	F6.381.05.0.00	SET SCREW M8X1.25X025 (COPPER COATED)	4	

TITLE: - EXHAUST MANIFOLD	**GROUP:** - DV0.024

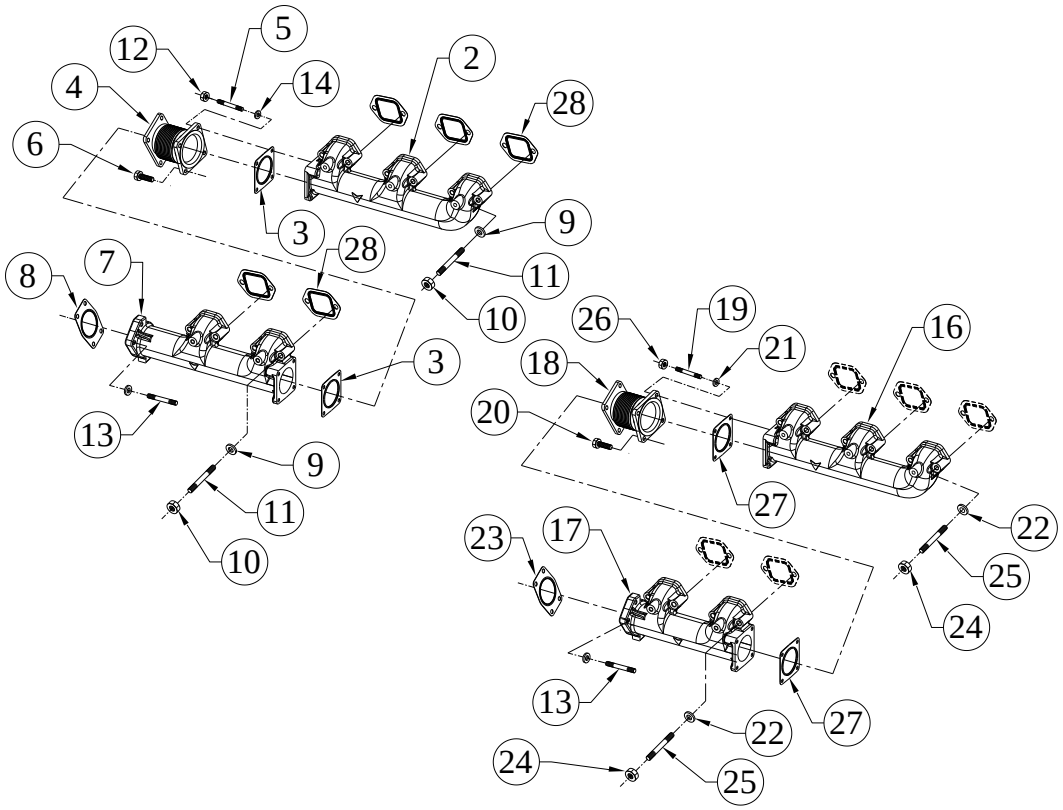

SR.NO.	PART NO.	DESCRIPTION	QTY.	REMARKS
21	50.506.08.000.	PLAIN MACHINED WASHER - M8	8	
22	50.506.10.000.	PLAIN MACHINED WASHER - M10	10	
23	DV0.024.06.0.00	JOINT (BET.EXH.MANI. AND ADAPTOR)	1	
24	DV0.024.18.0.00	SPECIAL NUT FOR EXHAUST MANIFOLD	10	
25	DV0.024.19.0.00	EXHAUST MANIFOLD STUD	10	
26	50.080.08.000.	NUT (SS) - M8x1.25	8	
27	DV0.024.08.0.00	JOINT (BET.EXH. MANI. AND EXPA.BELLOW)	2	
28	DV0.024.22.0.00	JOINT BETWEEN EXHAUST MANIFOLD & CYLINDER HEAD	10	

TITLE: - EXHAUST PIPING FOR DV10 EXPORT	**GROUP:** - DV0.806.11

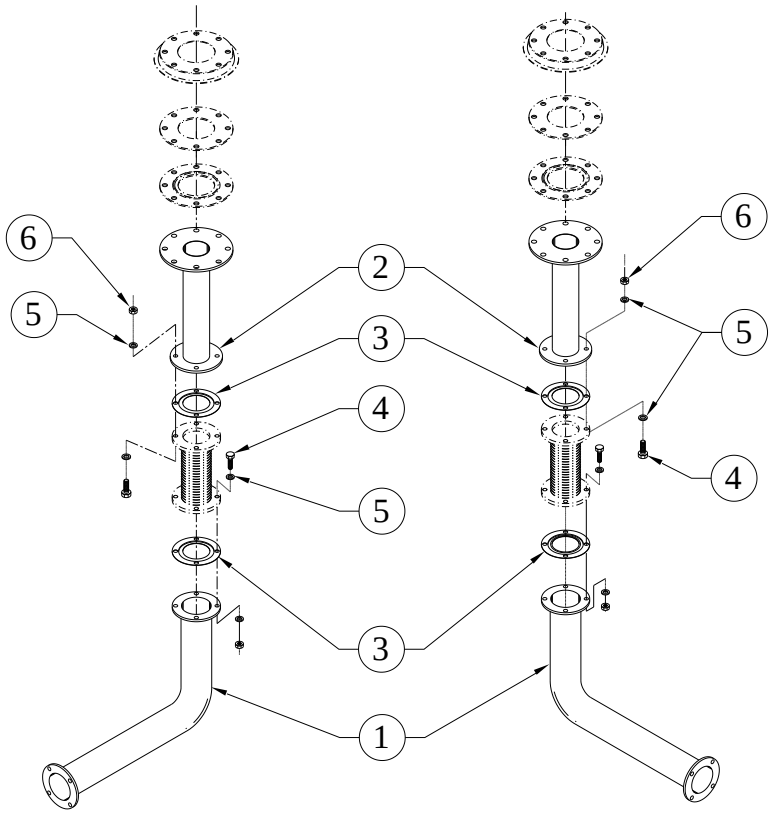

SR.NO.	PART NO.	DESCRIPTION	QTY.	REMARKS
1	DV0.806.45.0.00	EXHAUST PIPE (BELLOW TO BELLOW)	2	
2	DV0.806.46.0.00	EXHAUST PIPE (BELLOW TO SILENCER)	2	
3	F6.503.02.0.00	S.S.JOINT(4")	4	
4	50.003.14.040.	SET SCREW - M14X2X40 - 8.8	16	
5	50.506.14.000.	PLAIN MACHINED WASHER - M14	32	
6	50.006.14.000.	NUT - M14X2 - GR.8.8	16	

TITLE: - EXHAUST SILENCER FOR DV10	**GROUP:** - DV0.188.10

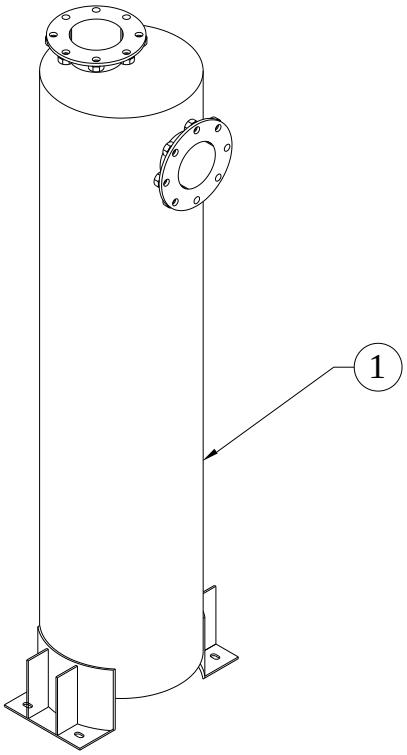

SR.NO.	PART NO.	DESCRIPTION	QTY.	REMARKS
1	DV0.188.10.0.00	EXHAUST SILENCER FOR DV10	2	

TITLE: - EXHAUST SYSTEM FOR DV8 EXPORT	**GROUP:** - DV0.064.2

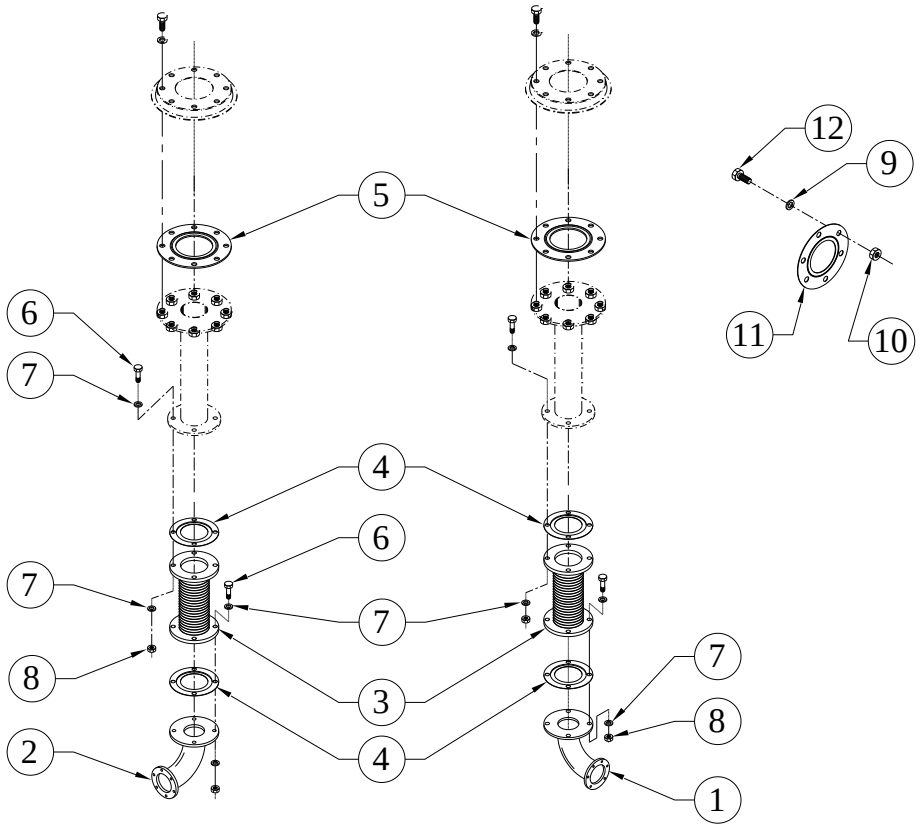

SR.NO.	PART NO.	DESCRIPTION	QTY.	REMARKS
1	DV0.033.17.0.00	EXHAUST ELBOW (LH SIDE FROM FWE)	1	
2	DV0.033.18.0.00	EXHAUST ELBOW (RH SIDE FROM F.W.E.)	1	
3	F6.550.01.0.00	EXPANSION BELLOW 4" (WITH 4 MTG. HOLE)	4	
4	F6.503.02.0.00	S.S.JOINT(4")	8	
5	F6.201.02.0.00	JOINT FOR EXHAUST SILENCER	8	
6	50.002.14.040.	SET BOLT - M14X2X40 - 8.8	32	
7	50.506.16.000.	PLAIN MACHINED WASHER - M16	64	
8	50.006.14.000.	NUT - M14X2 - GR.8.8	32	
9	50.506.20.000.	PLAIN MACHINED WASHER - M20	32	
10	50.006.20.000.	NUT - M20X2.5 - GR.8	32	
11	DV0.064.01.0.00	JOINT FOR DV10 TURBO	4	
12	50.003.20.050.	SET SCREW - M20X2.5X50 - 8.8	32	

TITLE: - FAN DRIVE ARRANGEMENT	**GROUP:** - DV0.029.4

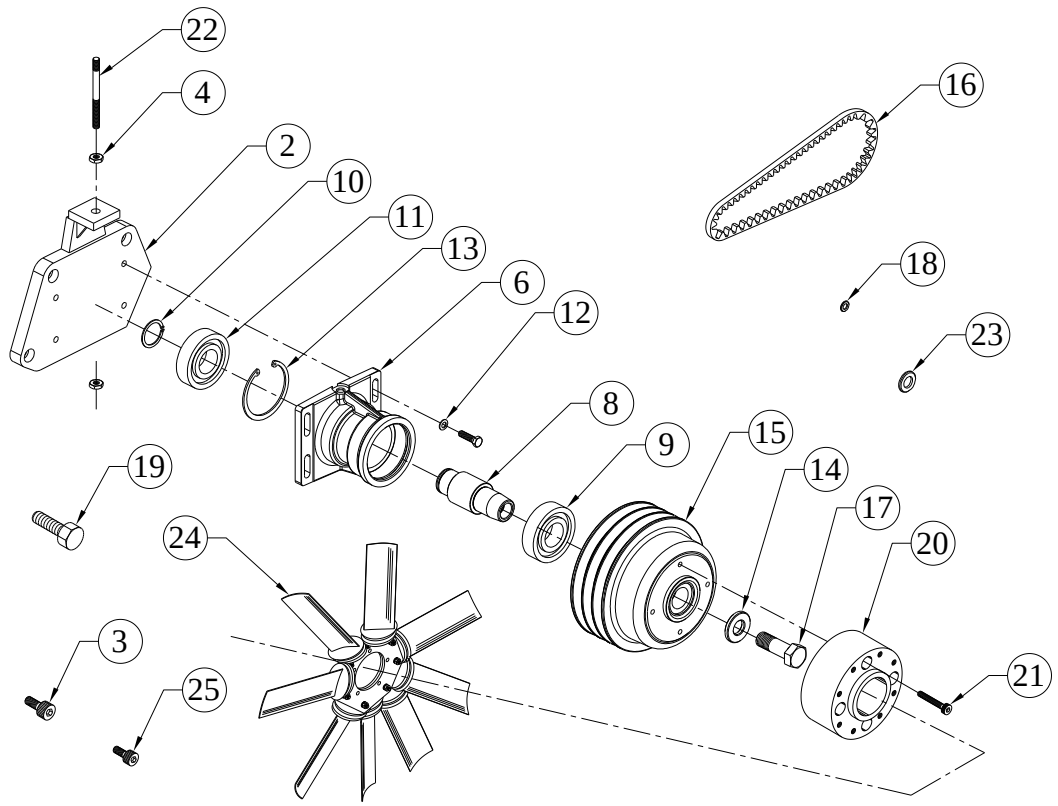

SR.NO.	PART NO.	DESCRIPTION	QTY.	REMARKS
*1	DV0.029.90.0.00	FAN DRIVE ASM	1	CONSISTING OF SR. NO. 2 TO 5 & 22, 23
2	DV0.029.03.0.00	BRACKET (FOR FAN DRIVE MOUNTING)	1	
3	50.011.10.025.	SOCKET HEAD SCREW - M10X1.5X25 - 8.8	4	
4	50.006.12.000.	NUT - M12X1.75 - GR.8	2	
*5	DV0.029.100.0.0	BEARING HOUSING ASM (PULLEY & SPACER FITMENT)	1	CONSISTING OF SR. NO. 6, 7 & 11 TO 21
6	DV0.029.32.0.00	BEARING HOUSING FOR FAN DRIVE	1	
*7	DV0.029.10.0.00	FAN DRIVE SHAFT ASM	1	CONSISTING OF SR. NO. 8 TO 10
8	DV0.029.04.0.00	SHAFT (FOR RADIATOR FAN)	1	
9	F6.192.07.0.00	BALL BEARING (80 X 35 X 21) FAG 6307-2RSR	1	

TITLE: - FAN DRIVE ARRANGEMENT	**GROUP:** - DV0.029.4

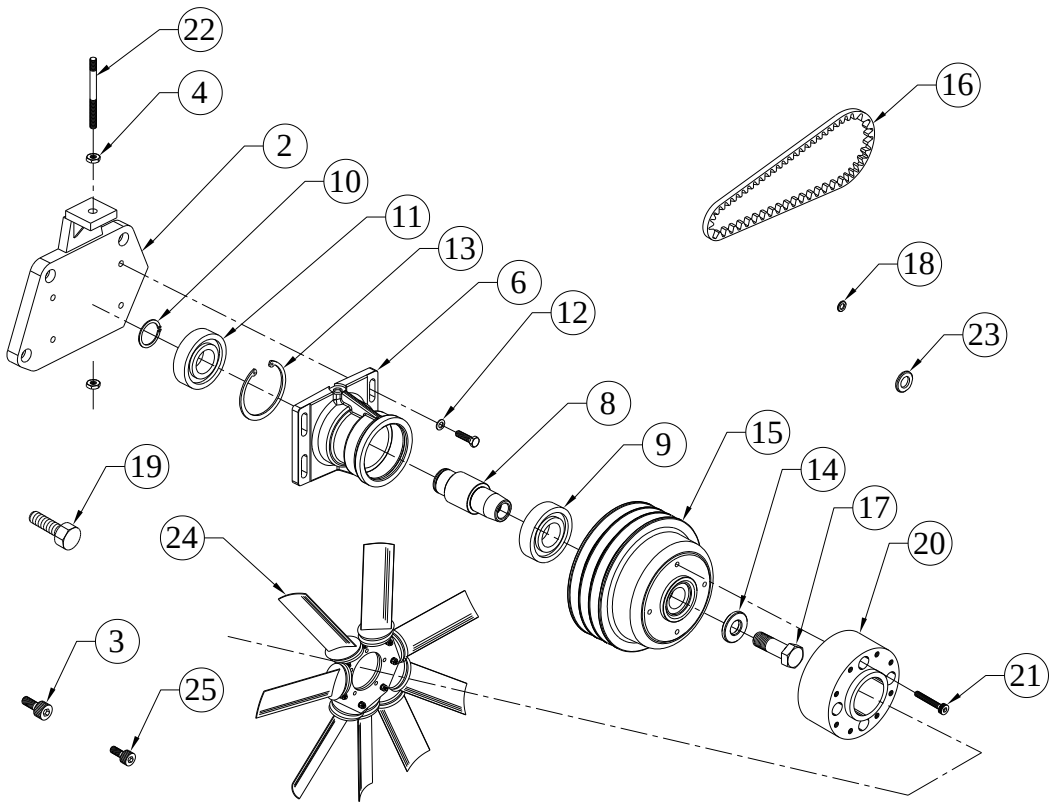

SR.NO.	PART NO.	DESCRIPTION	QTY.	REMARKS
10	50.501.35.000.	CIRCLIP EXTERNAL - 35 MM	1	
11	F6.192.07.0.00	BALL BEARING (80 X 35 X 21) FAG 6307-2RSR	1	
12	03.001.25.0.00	WASHER(FOR FUEL PUMP MTG)	4	
13	50.502.80.000.	CIRCLIP INTERNAL - 80 MM	1	
14	DV0.029.06.0.00	WASHER (FOR FAN DRIVE PULLEY)	1	
15	DV2.029.04.0.PR	FAN PULLEY(3GROOVE, 222 PCD) SPB PROFILE	1	
16	DV0.016.25.0.00	V WRAPPED BELT(SPB AR-1230) X 3 Set	1	
17	F6.015.07.0.00	HEX.BOLT FOR CRANK-PULLEY	1	
18	50.506.06.000.	PLAIN MACHINED WASHER - M6	5	
19	50.003.10.025.	SET SCREW - M10X1.5X25 - 8.8	4	
20	DV0.029.15.0.00	FAN SPACER FOR DV10	1	
21	50.011.08.055.	SOCKET HEAD SCREW - M8X1.25X55 - 8.8	4	

TITLE: - FAN DRIVE ARRANGEMENT	**GROUP:** - DV0.029.4

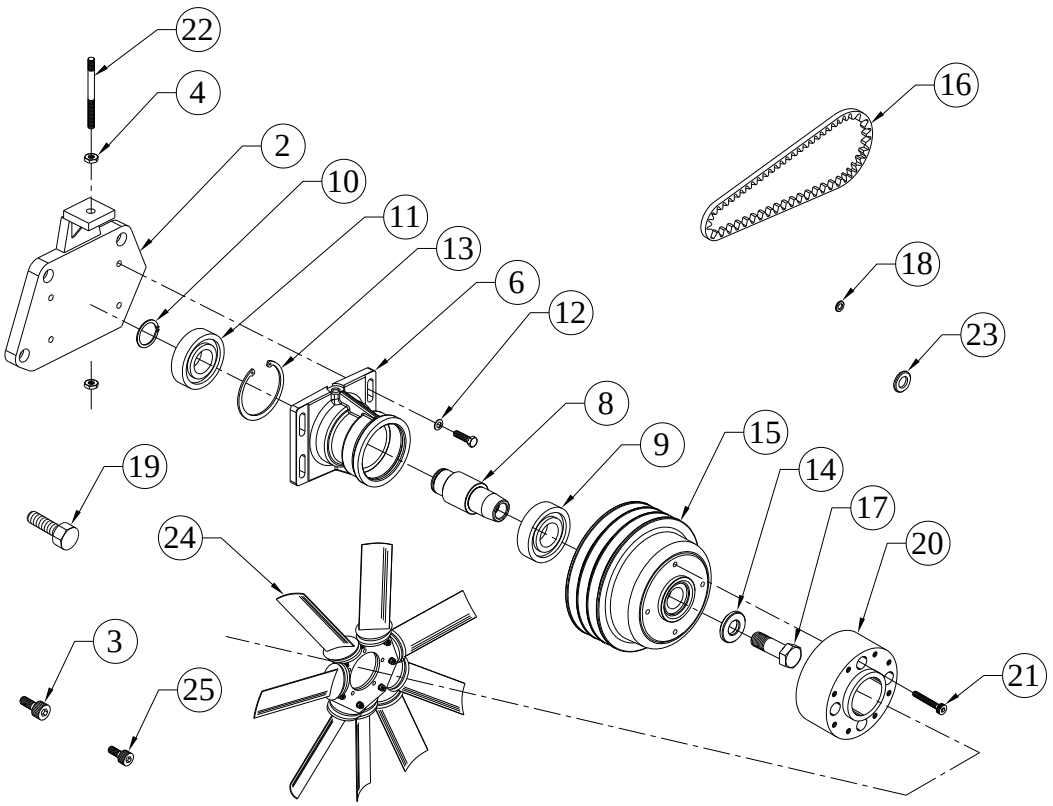

SR.NO.	PART NO.	DESCRIPTION	QTY.	REMARKS
22	DV0.029.07.0.00	SPECIAL STUD	1	
23	50.506.12.000.	PLAIN MACHINED WASHER - M12	1	
24	DV0.031.24.0.00	40" FAN FOR DV10 (ENGINEMATES DRG NO K 01198-I)	1	
25	50.011.08.025.	SOCKET HEAD SCREW - M8X1.25X25 - 8.8	8	

TITLE: - FILTER ELEMENTS	**GROUP:** - DV0.065

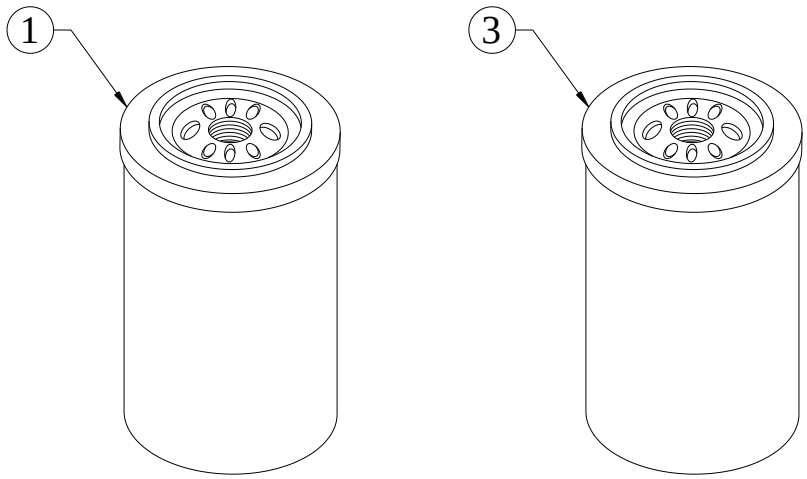

SR.NO.	PART NO.	DESCRIPTION	QTY.	REMARKS
1	DV0.014.11.0.00	LUB OIL FILTER	1	
*2	DV0.020.03.0.00	FUEL FILTER CARTRIDGE	2	NOT ILLUSTRATED
3	DV0.014.27.0.00	LUB OIL FILTER - WITH KIRLOSKAR LOGO REVERSAL	1	

TITLE: - FLOAT TYPE LEVEL SENSOR MAKE: RICO THREADING: 1" BSP, EFFECTIVE LENGTH 115 MM	**GROUP: -** DV0.901.25

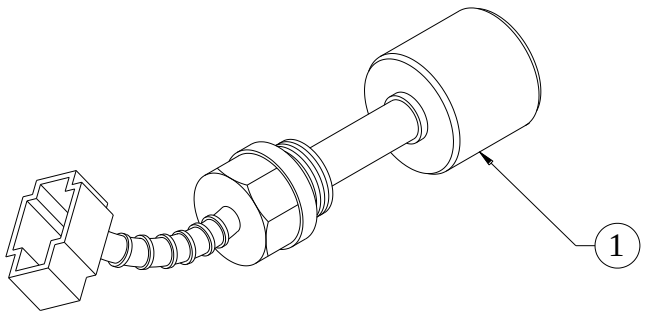

SR.NO.	PART NO.	DESCRIPTION	QTY.	REMARKS
1	DV0.901.25.0.00	FLOAT TYPE LEVEL SENSOR MAKE: RICO THREADING: 1" BSP, EFFECTIVE LENGTH 115 MM	1	

TITLE: - FLYWHEEL	**GROUP:** - DV0.026

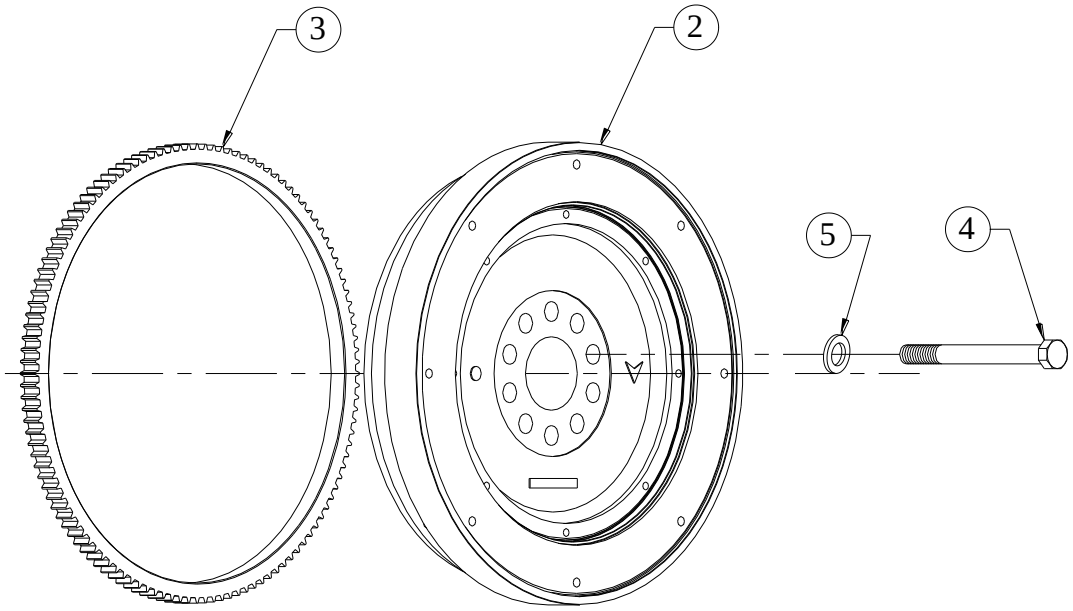

SR.NO.	PART NO.	DESCRIPTION	QTY.	REMARKS
*1	DV0.026.10.0.00	SUB ASSLY. OF FLYWHEEL AND STARTER RING)	1	CONSISTING OF SR. NO. 2 & 3
2	DV0.026.01.0.00	FLYWHEEL	1	NOT SUPPLIED LOOSE
3	F6.537.02.0.00	STARTER RING (T/C NO 68F6362360)	1	
4	DV0.026.02.0.00	BOLT (FOR FLYWHEEL)	10	
5	DV0.026.04.0.00	WASHER (FOR FLYWHEEL BOLT)	10	

TITLE: - FUEL FILTER	**GROUP:** - DV0.020

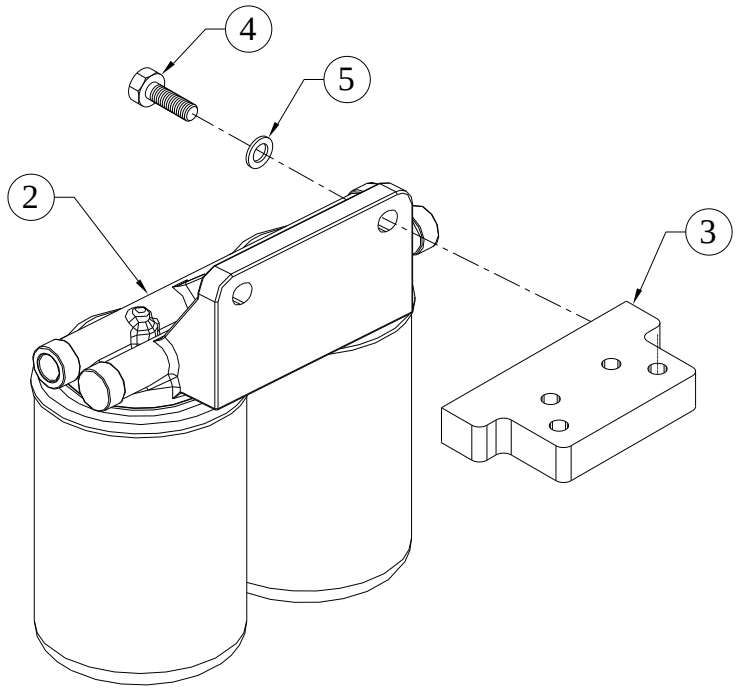

SR.NO.	PART NO.	DESCRIPTION	QTY.	REMARKS
*1	DV0.020.10.0.00	FUEL FILTER ASM	1	CONSISTING OF SR. NO. 2 & 3
2	DV0.020.01.0.00	FUEL FILTER FOR DV10 (F 002 H22 027)	1	
3	DV0.033.63.0.00	FUEL FILTER MOUTING BRACKET	1	
4	50.003.08.030.	SET SCREW - M8X1.25X30 - 8.8	4	
5	50.506.08.000.	PLAIN MACHINED WASHER - M8	4	

TITLE: - FUEL PIPES INLET RETURN FOR DV10 EXPORT ENGINE	**GROUP: -** DV0.507.5

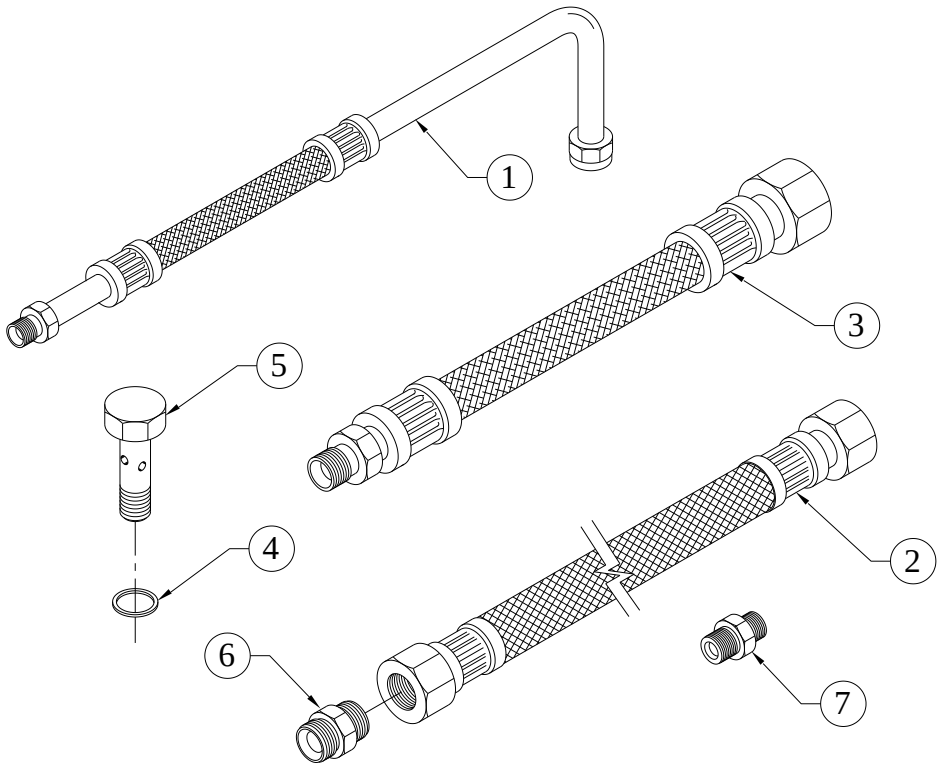

SR.NO.	PART NO.	DESCRIPTION	QTY.	REMARKS
1	DV0.507.15.0.00	FUEL PIPE (FROM PRE FILTER TO F.I.P)	1	
2	DV0.507.26.0.00	FUEL INLET PIPE FOR DV10	1	
3	DV0.507.27.0.00	FUEL RETURN PIPE FOR DV10	2	
4	50.508.18.000.	COPPER WASHER (20X24)	8	
5	50.504.06.000.	BANJO BOLT - M18X1.5	2	
6	3H.147.03.0.00	ADAPTOR FOR OIL SUMP (MALE BOTH SIDE TYPE)	1	
7	3H.147.07.0.00	ADAPTOR FOR LUB OIL SUMP DRAIN 1/2" BSP AND M18X1.5	1	

TITLE: - FUEL PUMP	**GROUP:** - DV0.040

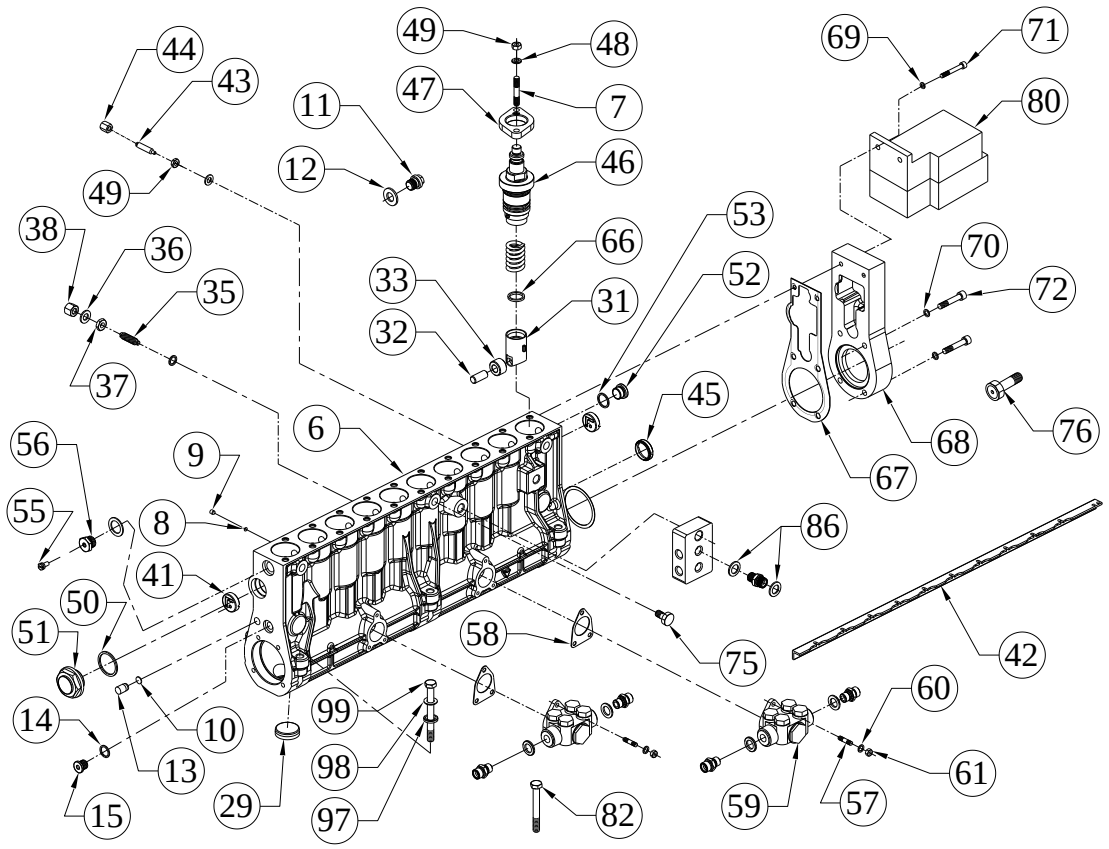

SR.NO.	PART NO.	DESCRIPTION	QTY.	REMARKS
*1	DV0.040.10.0.00	FUEL PUMP (CAM BOX TYPE)	1	CONSISTING OF SR. NO.2 & 81 TO 89
*2	DV0.040.90.0.00	GOVERNOR AND CAMBOX ASSY	1	CONSISTING OF SR. NO.3 & 67 TO 78
*3	DV0.040.80.0.00	RACK & INDV PUMP ASSY (WITH CAMBOX SUB ASSY)	1	CONSISTING OF SR. NO. 4, 30,34, 41 TO 54 & 57 TO 66
*4	DV0.040.70.0.00	FUEL PUMP CAMSHAFT ASSY (WITH BOTTOM SIDE CORE PLUGS)	1	CONSISTING OF SR. NO. 5, 16,21 TO 24, 29
*5	DV0.040.50.0.00	CAMBOX SUB ASSY (WITH STUD & PLUGS)	1	CONSISTING OF SR. NO. 6 TO 15
6	DV0.040.12.0.00	CAMBOX HOUSING FOR FUEL PUMP (MACHINED)	1	
7	DV0.040.53.0.00	STUD FOR PUMP MOUNTING	20	
8	DV0.040.52.0.00	WASHER FOR OIL GALLERY CROSS HOLE PLUG	9	

TITLE: - FUEL PUMP	**GROUP:** - DV0.040

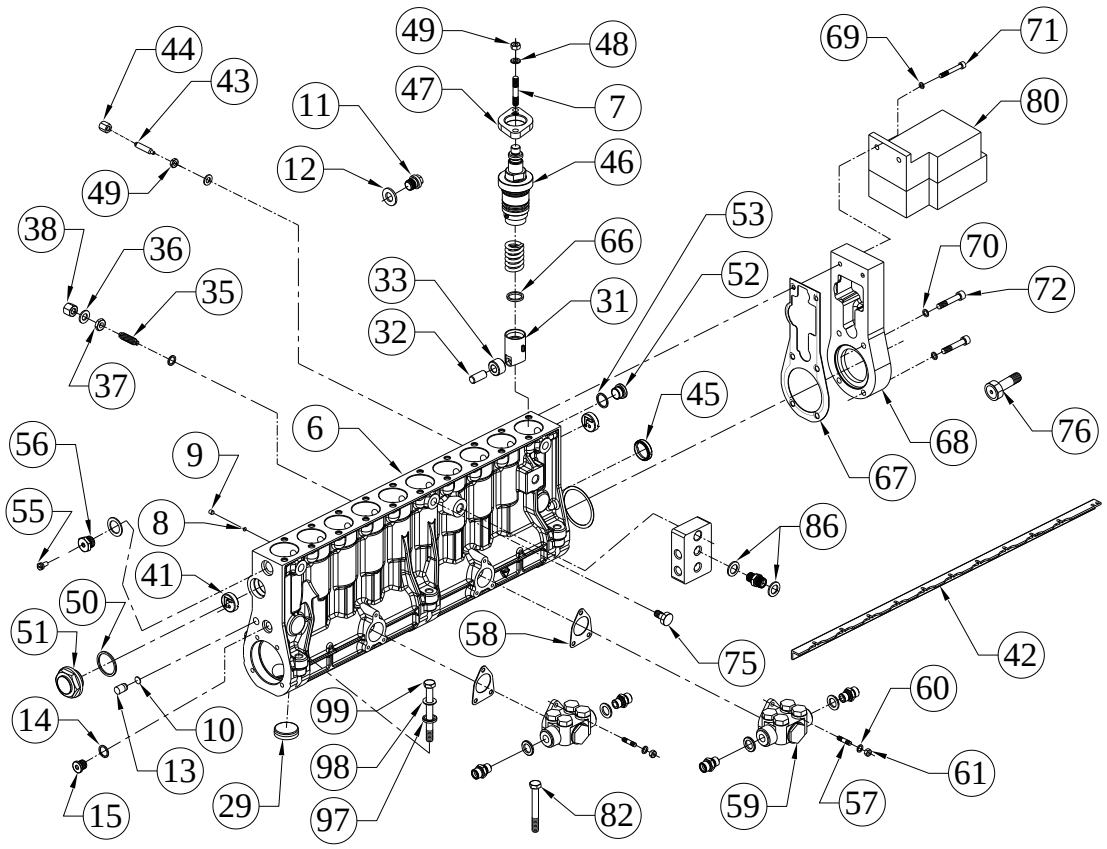

SR.NO.	PART NO.	DESCRIPTION	QTY.	REMARKS
9	DV0.040.44.0.00	PLUGS FOR OIL GALLERY CROSS HOLES	9	
10	DV0.040.51.0.00	WASHER FOR OILGALLERY PLUG	2	
11	50.602.14.000.	PLUG (M14X1.5)	1	
12	50.508.11.000.	COPPER WASHER (14X18)	3	
13	DV0.040.43.0.00	AUXILLARY OIL GALLERY END PLUGS	2	
14	50.508.12.000.	COPPER WASHER (14X20)	2	
15	50.610.14.000.	CORE PLUG-HEXAGONAL SOCKET HEAD(DIN-908)	2	
*16	DV0.040.40.0.00	CAMSHAFT ASSY (WITH INTERMEDIATE & GOVERNOR END BRG.)	1	CONSISTING OF SR. NO. 17 TO 20
17	DV0.040.03.0.00	CAM SHAFT	1	
18	DV0.040.06.0.00	INTERMEDIATE SUPPORT BEARING FOR CAM SHAFT	4	
19	DV0.040.05.0.00	GOVERNOR END BEARING (SKF NO. 21306 CC)	1	

TITLE: - FUEL PUMP	**GROUP:** - DV0.040

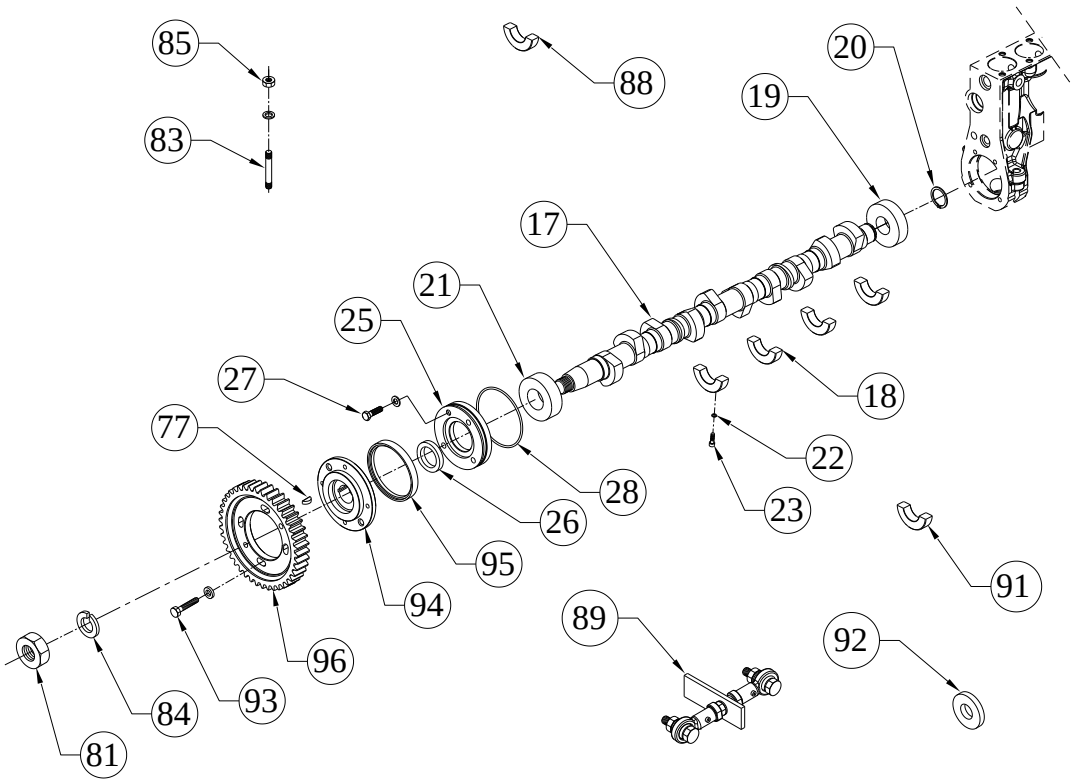

SR.NO.	PART NO.	DESCRIPTION	QTY.	REMARKS
20	50.501.30.000.	CIRCLIP EXTERNAL - 30 MM	1	
21	DV0.040.04.0.00	DRIVE END BEARING (SKF No. NU2207 ECP)	1	
22	50.508.05.000.	COPPER WASHER (8X12)	8	
23	50.011.06.016.	SOCKET HEAD SCREW - M6X1X16 - 8.8	8	
*24	DV0.040.45.0.00	OIL SEAL HOUSING ASSY	1	CONSISTING OF SR. NO.25 TO 28
25	DV0.040.08.0.00	OIL SEAL HOUSING	1	
26	DV0.040.07.0.00	OIL SEAL FOR DRIVE END	1	
27	50.003.08.030.	SET SCREW - M8X1.25X30 - 8.8	4	
28	DV0.040.09.0.00	O RING FOR OIL SEAL HOUSING	1	
29	DV0.040.48.0.00	CORE PLUG FOR FUEL PUMP (BOTTOM SIDE)	10	
*30	DV0.040.30.0.00	ROLLER TAPPET ASSLY.	10	CONSISTING OF SR. NO.31 TO 33
31	DV0.040.31.0.00	TAPPET	1	
32	DV0.040.32.0.00	ROLLER PIN	1	
33	DV0.040.33.0.00	ROLLER	1	

TITLE: - FUEL PUMP	**GROUP:** - DV0.040

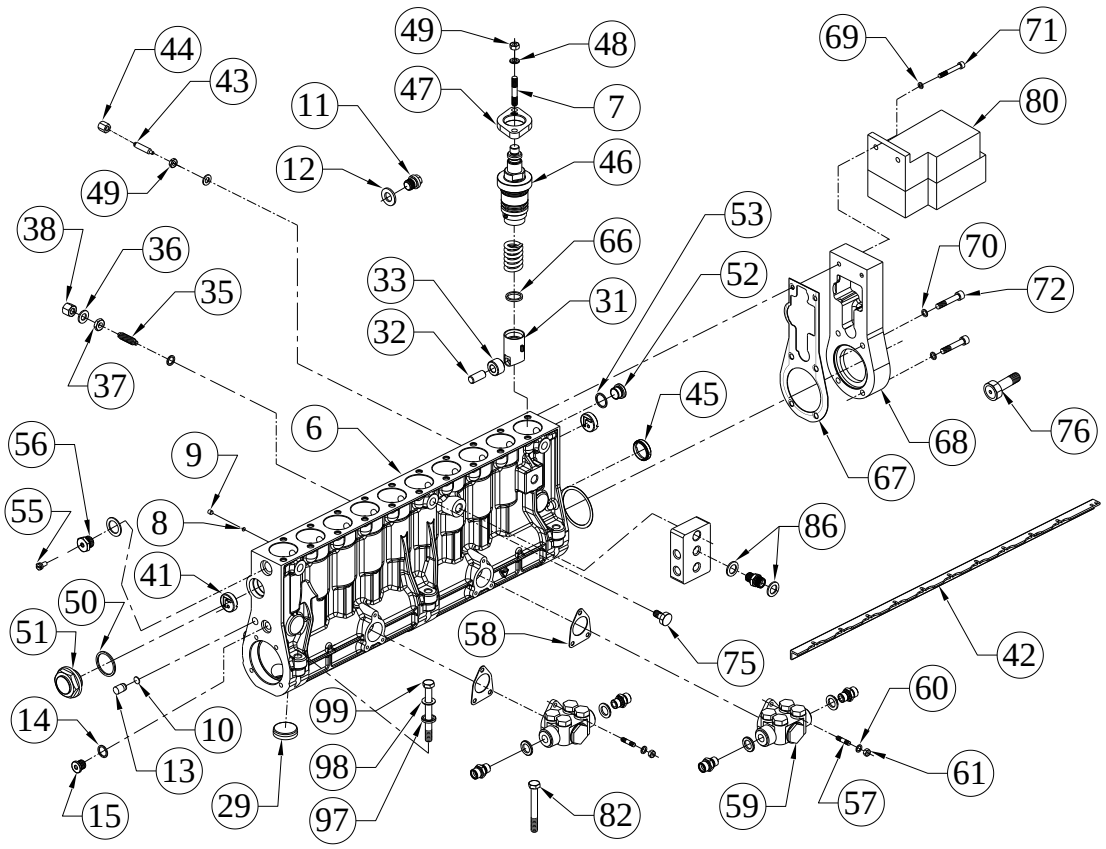

SR.NO.	PART NO.	DESCRIPTION	QTY.	REMARKS
*34	DV0.040.20.0.00	INTERMEDIATE SUPPORT FOR RACK (ASSLY)	1	CONSISTING OF SR. NO.35 TO 40
35	DV0.040.23.0.00	RACK SUPPORT ADJ. SCREW	2	
36	50.508.07.000.	COPPER WASHER (10X14)	2	
37	50.009.10.000.	NUT	2	
38	DV0.040.24.0.00	DOME NUT FOR RACK SUPPORT	2	
*39	DV0.040.84.0.00	NAME PLATE FOR FIP	1	NOT ILLUSTRATED
*40	50.522.04.005.	RIVET (ROUND HEAD)	2	NOT ILLUSTRATED
41	DV0.040.21.0.00	END SUPPORT BUSH FOR RACK	2	
42	DV0.040.19.0.00	CONTROL ROD/CONTROL RACK	1	
43	DV0.040.25.0.00	LOCKING SCREW FOR RACK	1	
44	DV0.040.71.0.00	DOME NUT FOR RACK LOCKING SCREW	1	
45	DV0.040.61.0.00	LOCK FOR END SUPPORT BUSH	1	
46	DV0.040.27.0.00	PF33 INDEVIDUAL PUMP	10	
47	DV0.040.36.0.00	PF 33 PUMP MOUNTING FLANGE	10	
48	50.506.08.000.	PLAIN MACHINED WASHER - M8	24	

TITLE: - FUEL PUMP	**GROUP:** - DV0.040

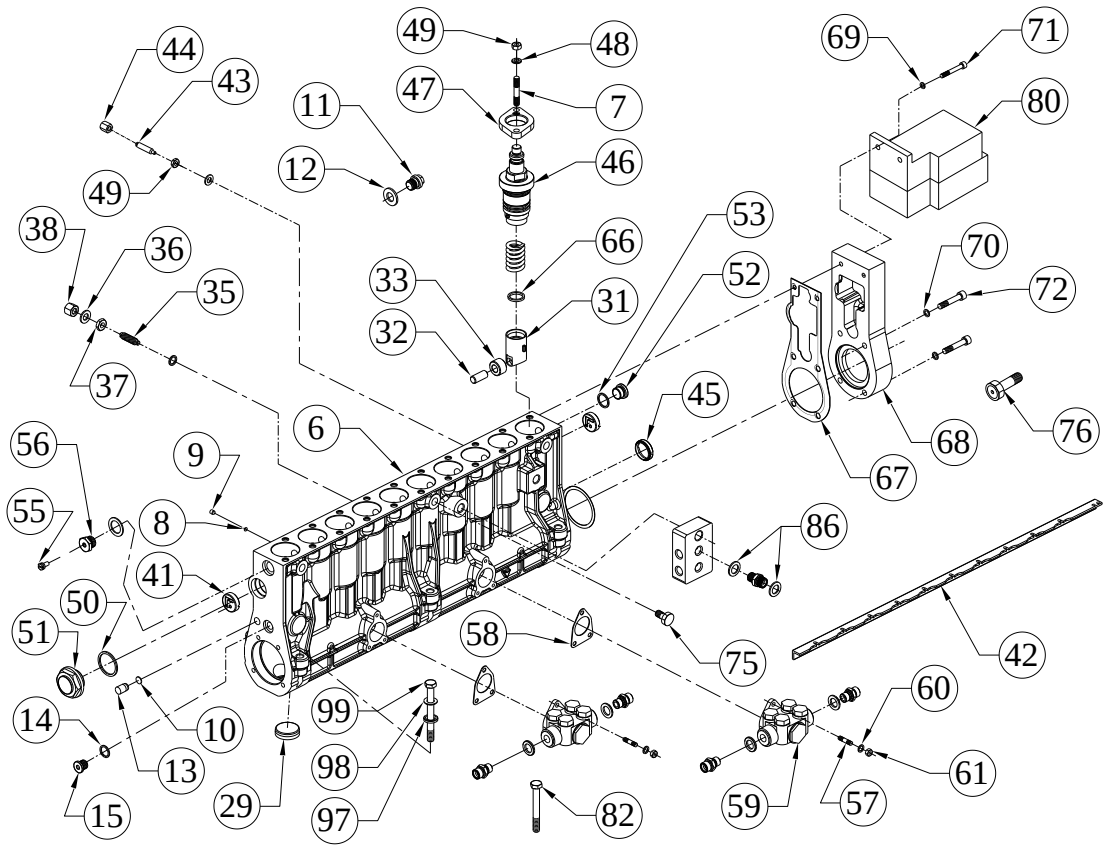

SR.NO.	PART NO.	DESCRIPTION	QTY.	REMARKS
49	DV0.040.83.0.00	NUT FOR FUEL PUMP (M8x1.25 10.9 GRADE)	21	
50	DV0.040.82.0.00	WASHER FOR CAP NUT	1	
51	DV0.040.49.0.00	CAP NUT FOR RACK DRIVING SIDE	1	
52	DV0.040.57.0.00	CORE PLUG FOR FUEL GALLERY	1	
53	50.508.16.000.	COPPER WASHER (18X22)	2	
*54	DV0.040.60.0.00	BREATHER SCREW ASSEMBLY	1	CONSISTING OF SR. NO. 55,56
55	DV0.040.59.0.00	VENT FOR BREATHER SCREW	1	
56	DV0.040.58.0.00	BREATHER SCREW	1	
57	50.010.06.020.	STUD - M6X1X20 - 8.8	6	
58	08.021.02.0.00	JOINT FOR FEED PUMP	2	
59	DV0.040.01.0.00	FEED PUMP	2	
60	50.506.06.000.	PLAIN MACHINED WASHER - M6	6	
61	50.006.06.000.	NUT - M6X1 - GR.8	6	
*62	DV0.040.66.0.00	SHIM FOR ROLLER TAPET (2.5MM THICK)	10	NOT ILLUSTRATED
*63	DV0.040.67.0.00	SHIM FOR ROLLER TAPPET (2.6MM)	10	NOT ILLUSTRATED

TITLE: - FUEL PUMP	**GROUP:** - DV0.040

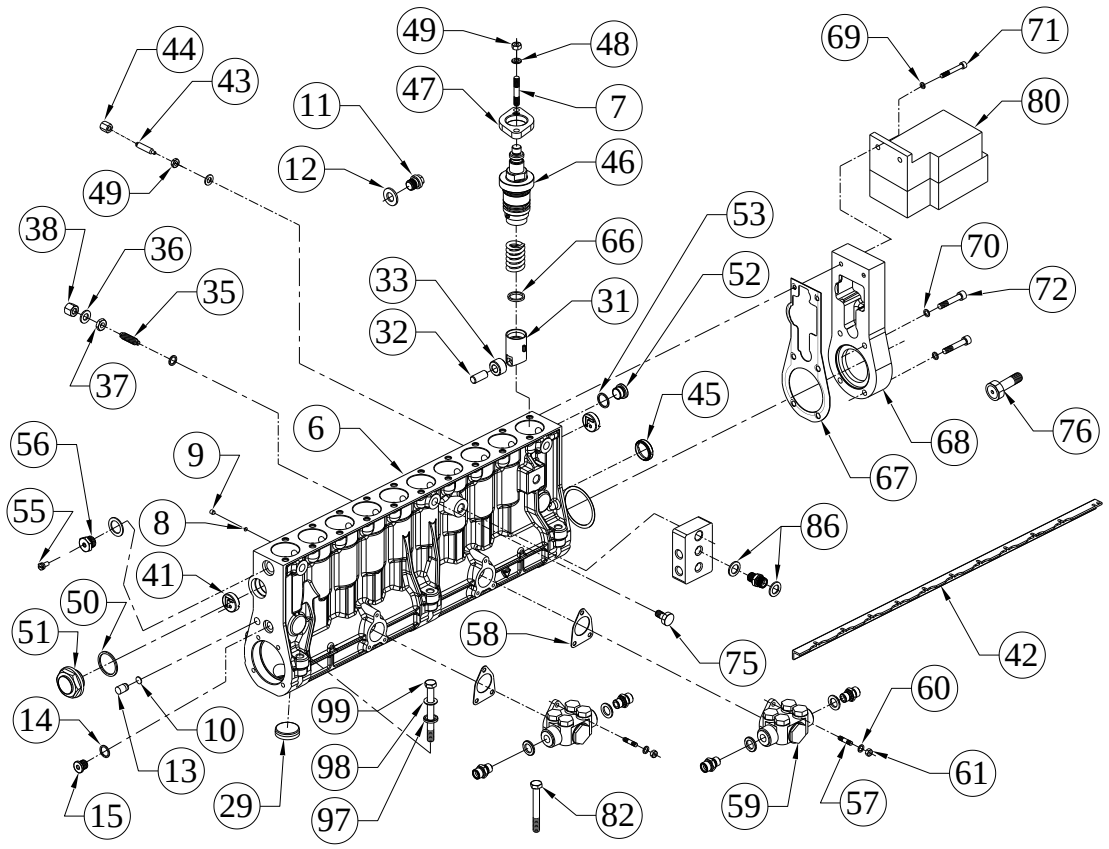

SR.NO.	PART NO.	DESCRIPTION	QTY.	REMARKS
*64	DV0.040.68.0.00	SHIM FOR ROLLER TAPPET (2.7MM THICK	10	NOT ILLUSTRATED
*65	DV0.040.74.0.00	SHIM FOR ROLLER TAPPET (2.8MM THICK)	10	NOT ILLUSTRATED
66	DV0.040.75.0.00	SHIM FOR ROLLER TAPPET (2.9MM THICK)	10	
67	DV0.040.98.0.00	JOINT FOR GOVERNOR MOUNTING PLATE	1	
68	DV0.040.14.0.00	GOVERNOR MTG. PLATE	1	
69	50.508.04.000.	COPPER WASHER (6X10)	9	
70	50.508.05.000.	COPPER WASHER (8X12)	4	
71	50.011.06.030.	SOCKET HEAD SCREW M6X1X30	2	
72	50.011.08.035.	SOCKET HEAD SCREW - M8X1.25X35 - 8.8	1	
*73	DV0.040.65.0.00	SHIM FOR CAMSHAFT END PLAY (0.5MM THICK)	1	NOT ILLUSTRATED
*74	DV0.040.69.0.00	SHIM FOR CAMSHAFT ENDPLAY (1.00MM THICK)	1	NOT ILLUSTRATED

TITLE: - FUEL PUMP	**GROUP:** - DV0.040

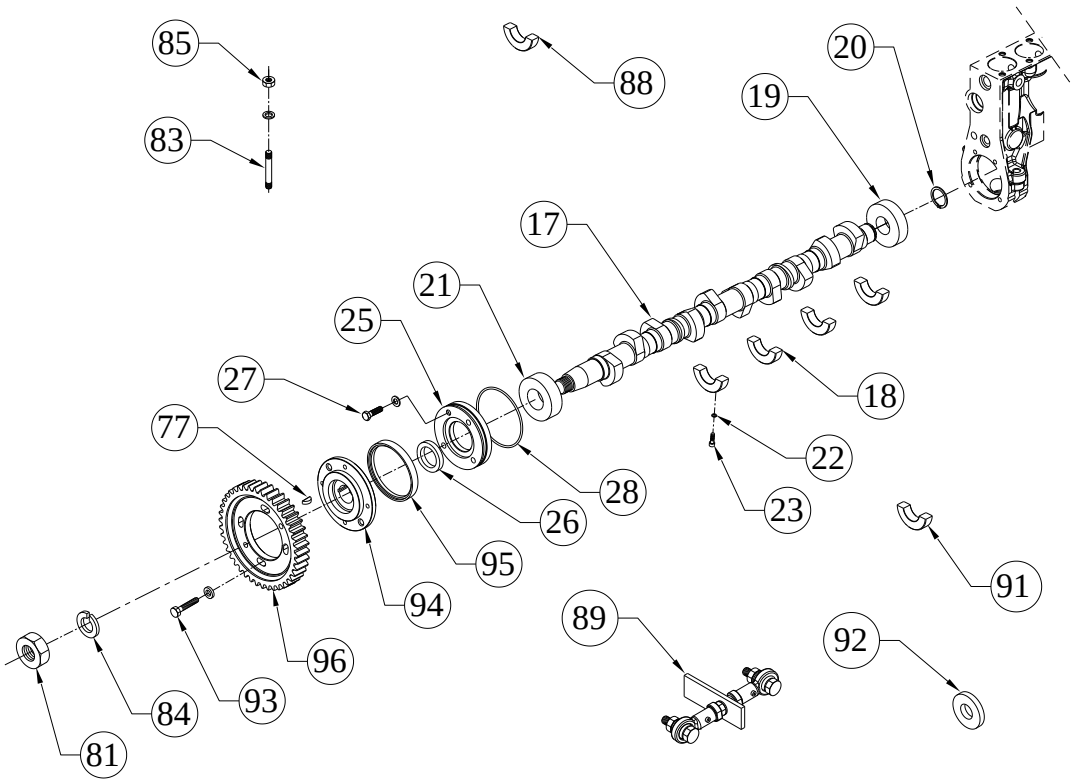

SR.NO.	PART NO.	DESCRIPTION	QTY.	REMARKS
75	50.504.01.000.	BANJO BOLT - M8X1.25	1	
76	34.032.60.0.00	O F VALVE ASSLY	1	
77	50.405.13.000.	WOODRUFF KEY	1	
*78	DV0.041.60.0.00	DV ELECTRONIC GOVERNOR WITH OVER - SPEED PROTECTION (ACTUATOR ADD175SA-24 V + SPEED CONTROL UNIT ESD5550)	1	CONSISTING OF SR. NO. 79 & 80
*79	DV0.040.92.0.00	SPEED CONTROL UNIT ESD5550	1	NOT ILLUSTRATED
80	DV0.040.93.0.00	ACTUATOR ADD175SA-24 V	1	
81	DV0.040.11.0.00	LOCKING NUT FOR GEAR MTG.FLANGE	1	
82	50.002.10.090.	SET BOLT - M10X1.5X90 - 8.8	2	
83	50.010.10.110.	STUD	1	
84	50.505.24.000.	SPRING WASHER - M24	1	
85	50.006.10.000.	NUT - M10X1.5 - GR.8	2	
86	50.508.14.000.	COPPER WASHER (16X22)	2	
*87	DV0.040.91.0.00	HELICOIL (M14X1.5X14 mm LONG)	5	NOT ILLUSTRATED

TITLE: - FUEL PUMP	**GROUP:** - DV0.040

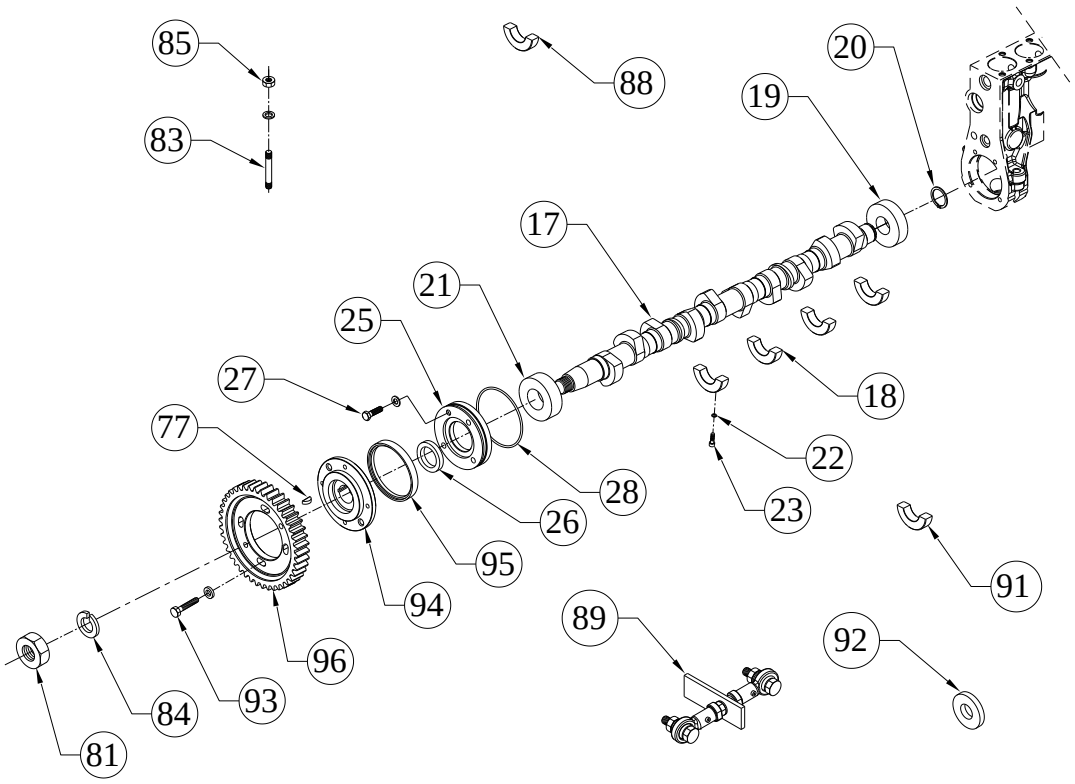

SR.NO.	PART NO.	DESCRIPTION	QTY.	REMARKS
88	DV0.040.06.0.00	INTERMEDIATE SUPPORT BEARING FOR CAM SHAFT	1	
89	DV0.040.85.0.00	LINKAGE ASSLY FOR GOVERNOR	1	
*90	DV0.040.91.0.00	HELICOIL (M14X1.5X14 mm LONG)	7	NOT ILLUSTRATED
91	DV0.040.06.0.00	INTERMEDIATE SUPPORT BEARING FOR CAM SHAFT	1	
92	03.716.03.0.00	WASHER(FUEL PUMP GEAR)	4	
93	50.003.08.025.	SET SCREW - M8X1.25X25 - 8.8	4	
94	DV0.040.47.0.00	GEAR MOUNTING FLANGE (HUB)	1	
95	DV0.040.73.0.00	FLAT SEAL FOR OIL SEAL HOUSING	1	
96	DV8.019.02.0.00	FUEL PUMP GEAR	1	
97	DV0.040.63.0.00	WASHER FOR FIP MOUNTING	6	
98	DV0.040.64.0.00	SPHERICAL WASHER FOR FIP MOUNTING	6	
99	50.002.10.110.	SET BOLT - M10X1.5X110 - 8.8	5	
*100	10.027.02.0.00	LEAD SEAL (5945010300)	1	NOT ILLUSTRATED

TITLE: - FUEL PUMP CAP	**GROUP:** - DV0.019

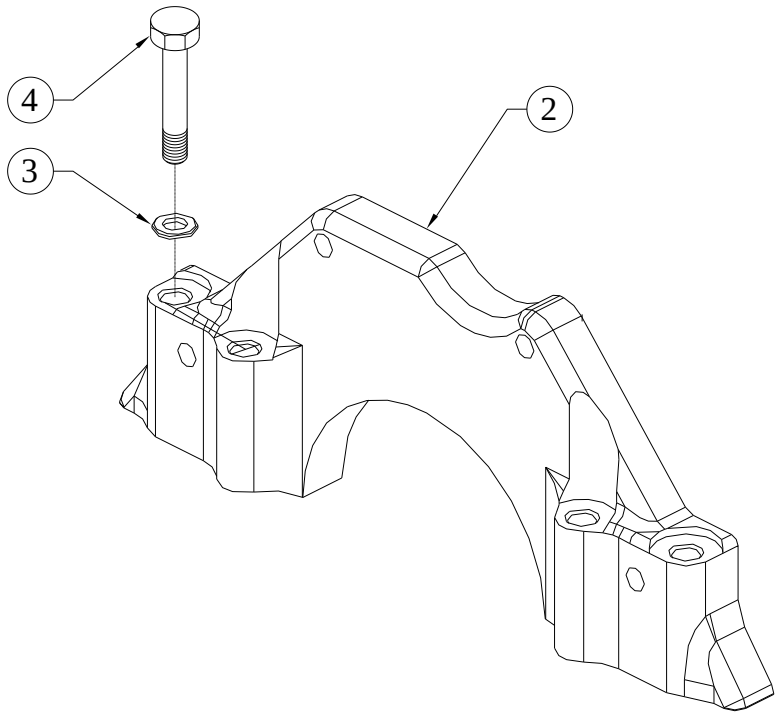

SR.NO.	PART NO.	DESCRIPTION	QTY.	REMARKS
*1	DV0.019.20.0.00	FUEL PUMP CAP ASSLY	1	CONSISTING OF SR.NO. 2 TO 4
2	DV0.019.04.0.00	FUEL PUMP CAP	1	
3	50.506.08.000.	PLAIN MACHINED WASHER - M8	4	
4	50.002.08.070.	SET BOLT - M8X1.25X70 - 8.8	4	

TITLE: - GEAR CASING CUM FLYWHEEL HSG	**GROUP:** - DV0.025

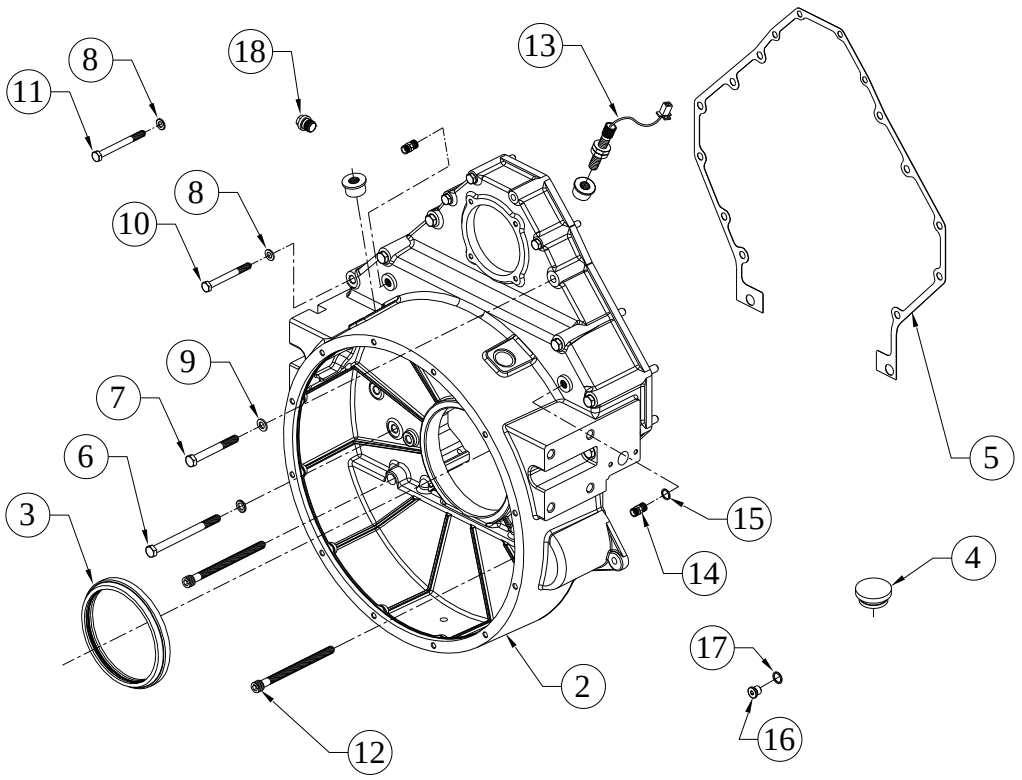

SR.NO.	PART NO.	DESCRIPTION	QTY.	REMARKS
*1	DV0.025.10.0.00	FLYWHEEL HSG CUM GEAR CASING ASSLY	1	CONSISTING OF SR. NO. 2 TO 12
2	DV0.025.01.0.00	GEAR COVER CUM BELL HOUSING	1	
3	DV0.025.02.0.00	OIL SEAL FLYWHEEL END	1	
4	F6.016.12.0.00	RUBBER CAP.	1	
5	DV0.025.03.0.00	JOINT FOR GEAR CASING	1	
6	50.002.12.150.	SET BOLT - M12X1.75X150 - 8.8	9	
7	50.002.12.100.	SET BOLT - M12X1.75X100 - 8.8	2	
8	50.506.10.000.	PLAIN MACHINED WASHER - M10	4	
9	50.506.12.000.	PLAIN MACHINED WASHER - M12	11	
10	50.002.10.090.	SET BOLT - M10X1.5X90 - 8.8	2	
11	50.002.10.100.	SET BOLT - M10X1.5X100 - 8.8	2	
12	DV0.025.05.0.00	SOCKET HEAD SCREW (M12 X 165)	2	
13	F6.741.16.0.00	MAGNETIC PICK UP 16X1.5 THREADING (UNITCH MAKE) FOR 250 KVA WITH 110 SERIES MSSL CON.	1	
14	DV0.032.44.0.PR	ADAPTOR (M30x1.5 BOTH SIDE)	2	

TITLE: - GEAR CASING CUM FLYWHEEL HSG	**GROUP:** - DV0.025

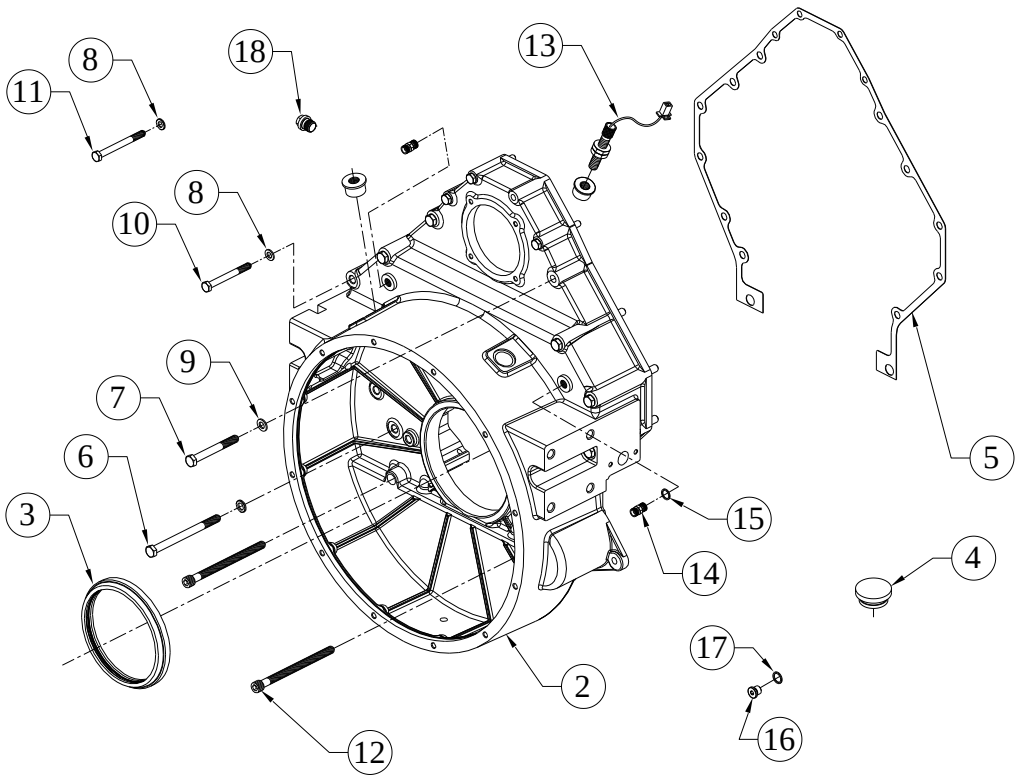

SR.NO.	PART NO.	DESCRIPTION	QTY.	REMARKS
15	50.508.34.000.	COPPER WASHER (30X36)	2	
16	50.610.14.000.	CORE PLUG-HEXAGONAL SOCKET HEAD(DIN-908)	2	
17	50.508.12.000.	COPPER WASHER (14X20)	3	
18	50.602.14.000.	PLUG (M14X1.5)	1	

TITLE: - GEMS LOP TRANSMITTER 4-20 mA	**GROUP:** - DV0.812.1

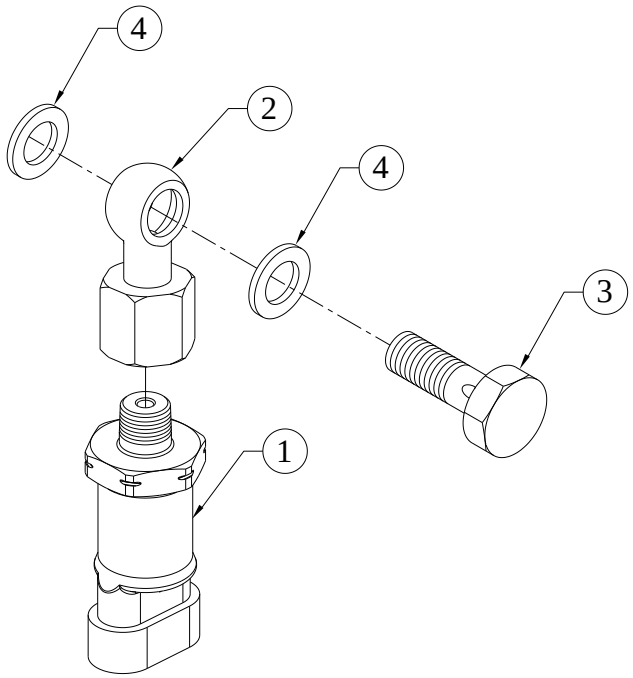

SR.NO.	PART NO.	DESCRIPTION	QTY.	REMARKS
1	DV0.812.11.0.00	4-20 mA LUBE OIL PRESSURE SENSOR GEMS MAKE 3100 SERIES	1	
2	DV2.903.06.0.00	ADAPTOR FOR GEMS LOP SENSOR	1	
3	50.504.02.000.	BANJO BOLT - M10X1.5	1	
4	50.508.08.000.	COPPER WASHER (10X16)	3	

TITLE: - HEAT SHIELD	**GROUP:** - DV0.051

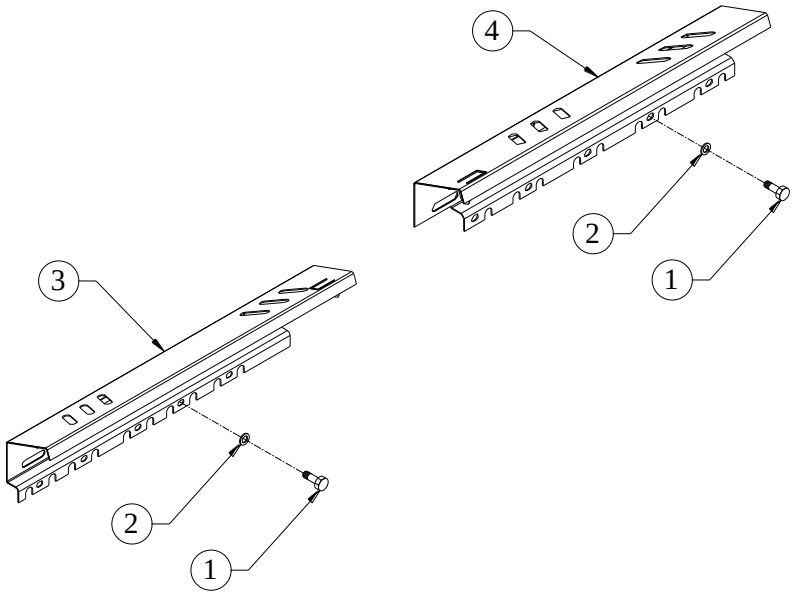

SR.NO.	PART NO.	DESCRIPTION	QTY.	REMARKS
1	50.002.10.020.	SET BOLT - M10X1.5X20 - 8.8	10	
2	50.548.10.000.	SPECIAL PLAIN WASHER - M10	10	
3	DV0.051.14.0.00	HEAT SHIELD (R.H. (FOR MODIFIED EXHAUST MANIFOLD	1	
4	DV0.051.15.0.00	HEAT SHIELD L.H. (FOR MODIFIED EXHAUST MANIFOLD)	1	

TITLE: - HIGH PRESSURE PIPE (INTEGRAL SLEEVE)	**GROUP:** - DV0.021.2

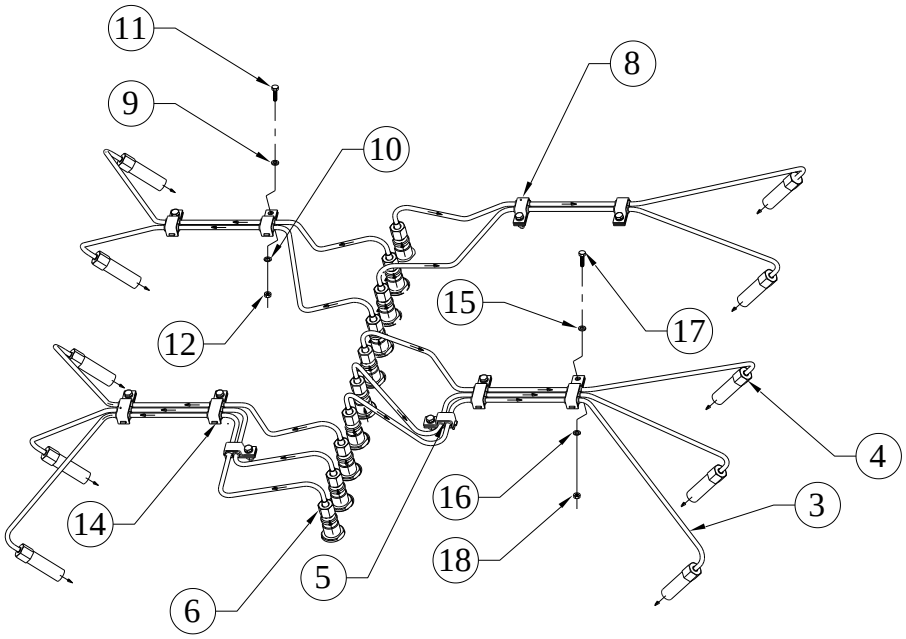

SR.NO.	PART NO.	DESCRIPTION	QTY.	REMARKS
*1	DV0.021.130.0.00	ASSEMBLY OF H.P.PIPE (INTEGRAL SLEEVE, COMPLETE SET)	1	CONSISTING OF SR. NO. 2,7 & 13
*2	DV0.021.120.0.00	H.P.PIPE ASSEMBLY (6.35 X 1.8)	10	CONSISTING OF SR. NO. 3 TO 6
3	DV0.021.102.0.00	HIGH PRESSURE PIPE (6.35 X 1.8)	1	NOT SUPPLID LOOSE
4	3H.101.12.0.00	UNION NUT M14 X 1.5 (INJECTOR SIDE)	1	NOT SUPPLID LOOSE
5	3H.101.13.0.00	SLEEVE (10 X 15)	2	
6	DV0.021.02.0.00	UNION NUT (M14X1.5)	1	NOT SUPPLID LOOSE
*7	DV0.021.100.0.00	HIGH PRESSURE PIPE CLAMP ASSEMBLY (FOR 2 GROOVES)	12	CONSISTING OF SR. NO. 8 TO 12
8	DV0.021.101.0.00	RUBBER MOULDED METAL STRIP (FOR 2 GROOVES)	2	
9	50.506.05.000	PLAIN MACHINED WASHER - M5	1	
10	50.505.05.000	SPRING WASHER - M5	1	

TITLE: - HIGH PRESSURE PIPE (INTEGRAL SLEEVE)	**GROUP:** - DV0.021.2

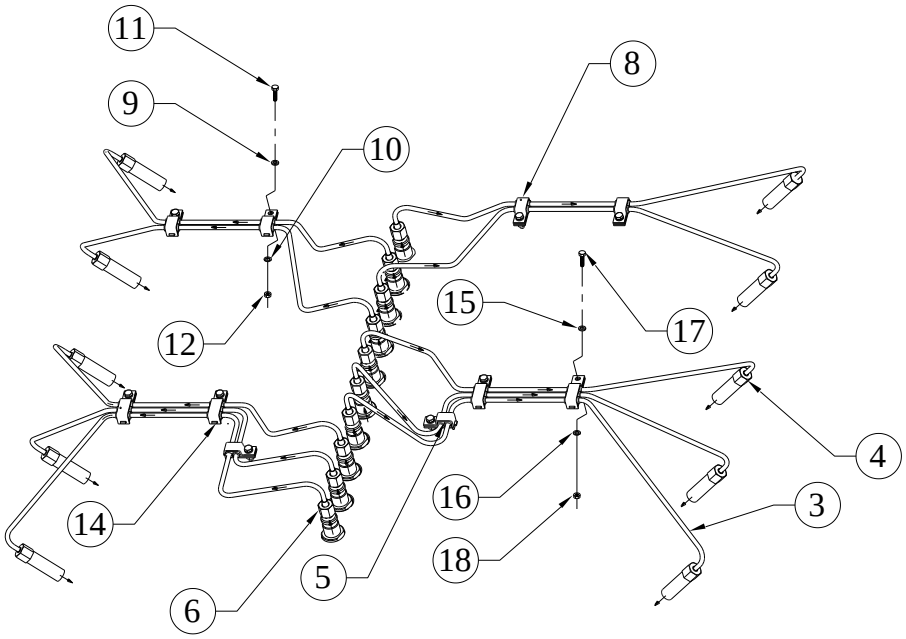

SR.NO.	PART NO.	DESCRIPTION	QTY.	REMARKS
11	50.003.05.020	SET SCREW - M5X0.8X20 - 8.8	1	
12	50.006.05.000	NUT - M5X0.8 - GR.8.8	1	
*13	DV0.021.110.0.00	HIGH PRESSURE PIPE CLAMP ASSEMBLY (FOR 3 GROOVES)	4	CONSISTING OF SR. NO. 14 TO 18
14	DV0.021.111.0.00	RUBBER MOULDED METAL STRIP (FOR 3 GROOVES)	2	
15	50.506.05.000	PLAIN MACHINED WASHER - M5	2	
16	50.505.05.000	SPRING WASHER - M5	2	
17	50.003.05.020	SET SCREW - M5X0.8X20 - 8.8	2	
18	50.006.05.000	NUT - M5X0.8 - GR.8.8	2	

TITLE: - INJECTORS	**GROUP:** - DV0.008

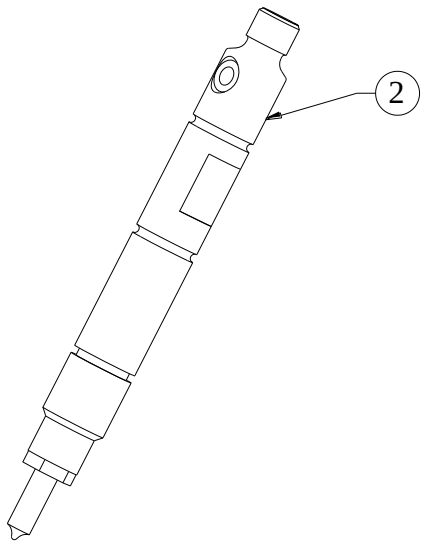

SR.NO.	PART NO.	DESCRIPTION	QTY.	REMARKS
*1	DV0.008.10.0.00	INJECTOR ASSLY. (NOZZE HOLDER ASSY.)	1	CONSISTING OF SR. NO. 2
2	DV0.008.13.0.00	INJECTOR ED80 1106 00 7X146X1000 HTF)	1	

TITLE: - INLET MANIFOLD	**GROUP:** - DV0.023

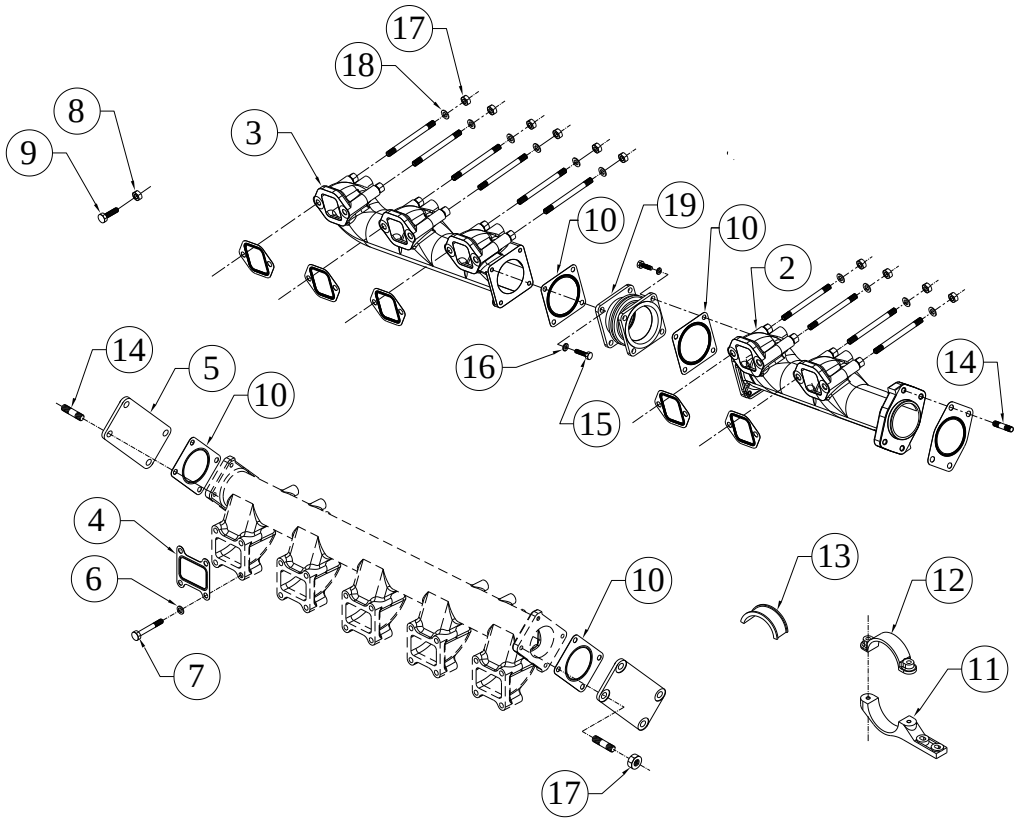

SR.NO.	PART NO.	DESCRIPTION	QTY.	REMARKS
*1	DV0.023.10.0.00	INLET MANIFOLD RH/LH ASM	1	CONSISTING OF SR. NO. 2 TO 19
2	DV0.023.08.0.00	INLET MANIFOLD (RH / LH) 2 PORT	1	
3	DV0.023.09.0.00	INLET MANIFOLD (RH / LH) 3 PORT	1	
4	DV0.023.03.0.00	JOINT (BET.INLET MANIFOLD AND CYL.HEAD)	5	
5	DV0.023.06.0.00	COVER PLATE (FOR INLET MANIFOLD)	1	
6	50.506.10.000.	PLAIN MACHINED WASHER - M10	88	
7	50.002.10.065.	SET BOLT - M10X1.5X65 - 8.8	20	
8	50.006.10.000.	NUT - M10X1.5 - GR.8	12	
9	50.003.10.030.	SET SCREW - M10X1.5X30 - 8.8	12	
10	DV0.023.02.0.00	JOINT (MAIN AIR PIPE TO INLET MANIFOLD)	4	
11	DV0.023.12.0.00	AIR PIPE CLAMP (BOTTOM)	2	
12	DV0.023.13.0.00	AIR PIPE CLAMP (TOP)	2	
13	DV0.023.14.0.00	RUBBER BUSH	8	

TITLE: - INLET MANIFOLD	**GROUP:** - DV0.023

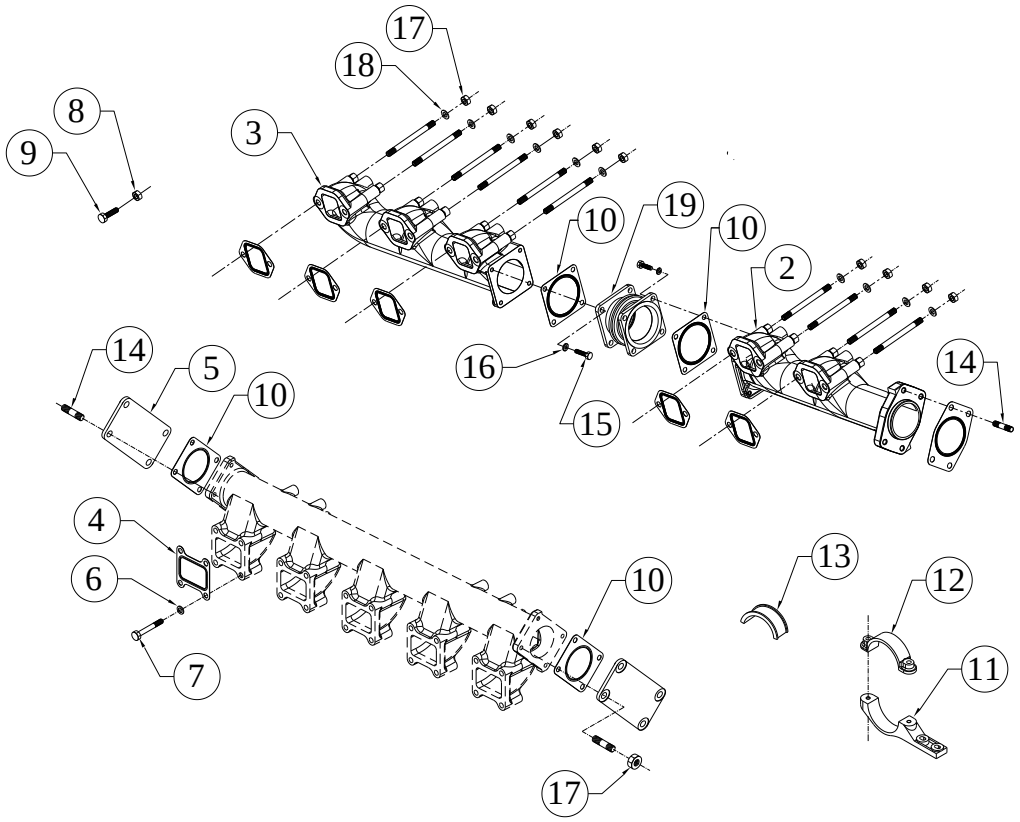

SR.NO.	PART NO.	DESCRIPTION	QTY.	REMARKS
14	50.010.08.040.	STUD - M8X1.25X40 - 8.8	8	
15	50.003.08.030.	SET SCREW - M8X1.25X30 - 8.8	8	
16	50.548.08.000.	SPL.PLAIN M/CED WASHER	8	
17	50.006.08.000.	NUT- M8X1.25 - GR.8	8	
18	50.506.08.000.	PLAIN MACHINED WASHER - M8	16	
19	DV0.023.11.0.00	EXPANSION BELLOW FOR INLET MANIFOLD	1	

TITLE: - ITERMEDIATE DOUBLE GEARS (CRANK GEAR AND CAM GEAR)	**GROUP: -** DV0.010

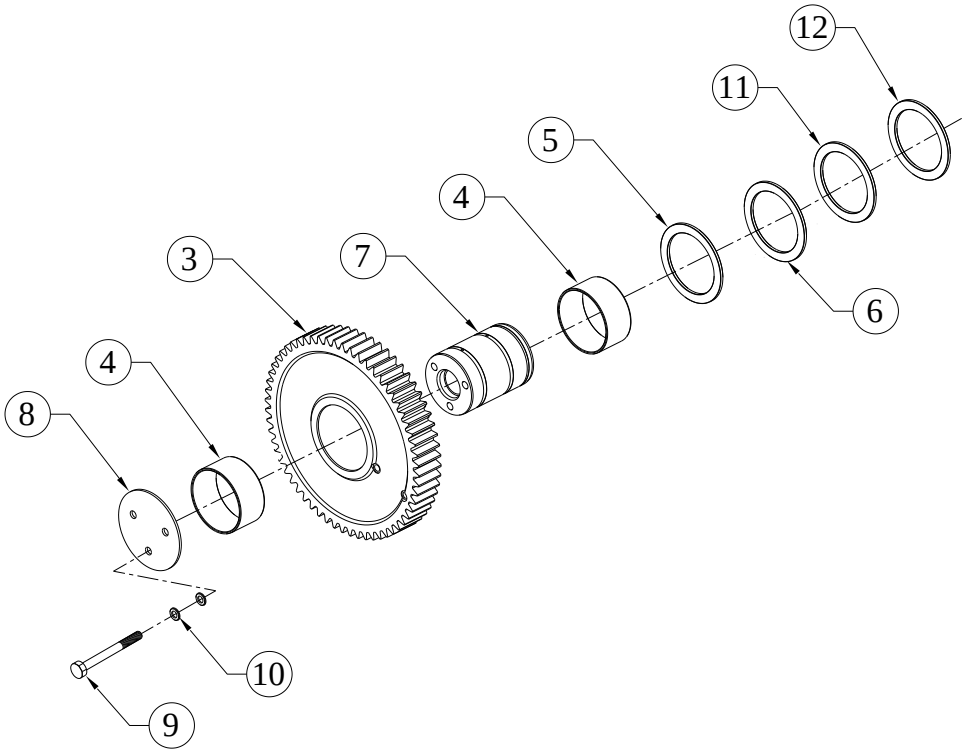

SR.NO.	PART NO.	DESCRIPTION	QTY.	REMARKS
*1	DV0.010.20.0.00	DOUBLE GEAR ASSLY (CRANK GEAR AND CAM GEAR)	1	CONSISTING OF SR. NO. 2 & 5 TO 12
*2	DV0.010.10.0.00	SUB ASSLY.OF DOUBE GEAR AND BUSH (INTERMIDATE)	1	CONSISTING OF SR. NO. 3 & 4
3	DV8.010.01.0.00	DOUBLE GEAR	1	NOT SUPPLIED LOOSE
4	F6.001.40.0.00	BUSH	2	NOT SUPPLIED LOOSE
5	2H.038.02.0.00	THRUST WASHER	1	
6	DV0.010.04.0.00	THRUST WASHER (FOR INTERMEDIATE GEAR SUPPORT)	1	
7	DV0.010.02.0.00	DOUBLE GEAR SUPPORT	1	
8	DV0.010.03.0.00	RETAINER PATE (FOR GEAR SUPPORT)	1	
9	50.002.08.115	SET BOLT - M8X1.25X115 - 8.8	3	
10	50.506.08.000	PLAIN MACHINED WASHER - M8	3	

TITLE: - ITERMEDIATE DOUBLE GEARS (CRANK GEAR AND CAM GEAR)	**GROUP: -** DV0.010

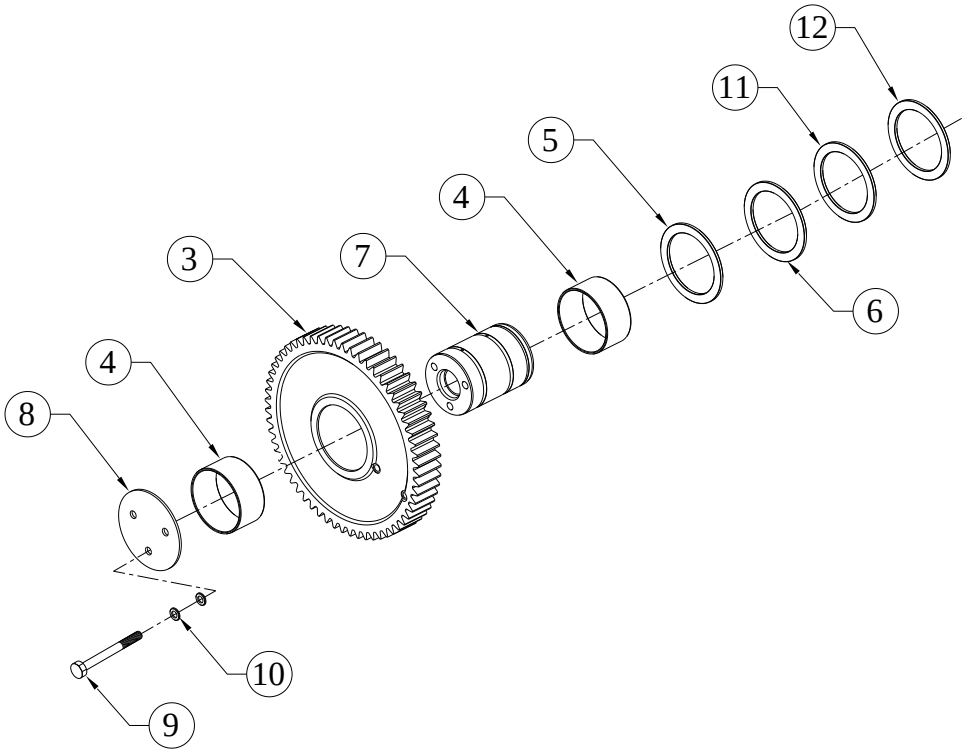

SR.NO.	PART NO.	DESCRIPTION	QTY.	REMARKS
11	DV0.010.06.0.00	THRUST WASHER (FOR INTERMEDIATE GEAR SUPPORT) 4.2 mm THICK	1	
12	DV0.011.04.0.00	THRUST WASHER (3.9MM THICK)	1	

TITLE: - ITERMEDIATE GEAR ASSLY (CAM & FUEL PUMP GEAR)	**GROUP: -** DV0.011

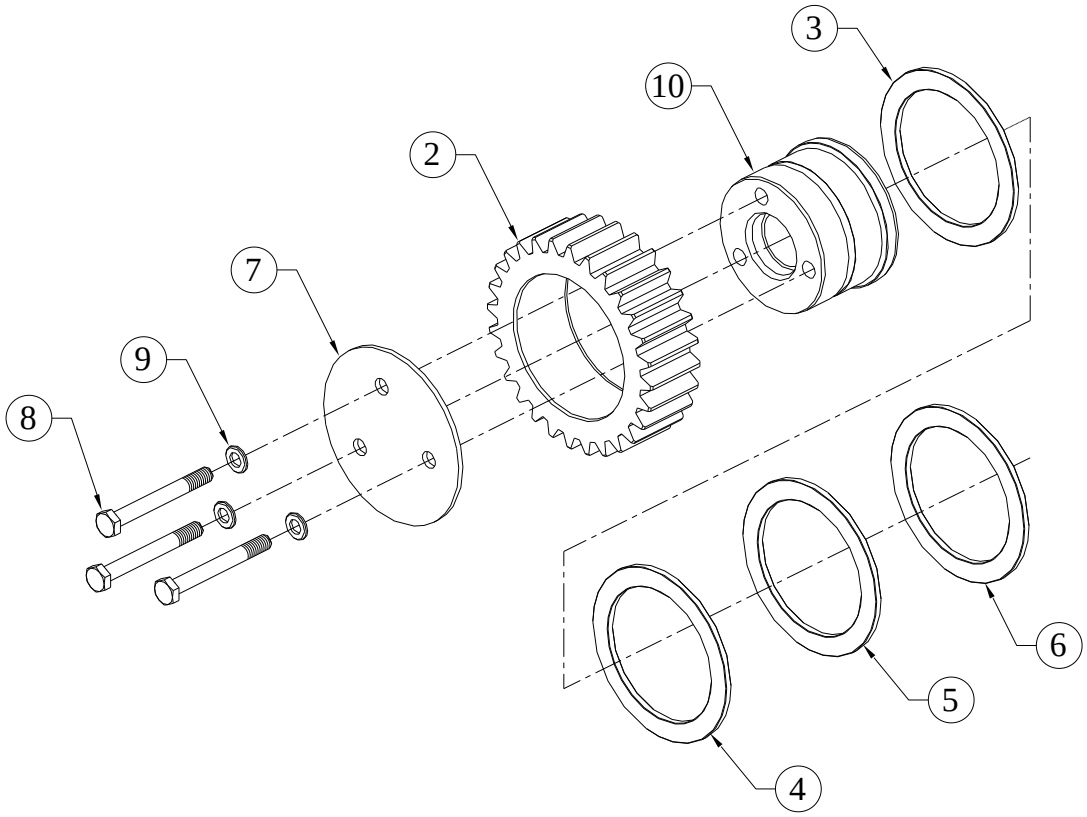

SR.NO.	PART NO.	DESCRIPTION	QTY.	REMARKS
*1	DV0.011.20.0.00	INTERMEDIATE GEAR ASSLY (CAM & FUEL PUMP GEAR)	1	CONSISTING OF SR. NO. 2 TO 10
2	DV0.011.10.0.00	SUB ASSLY. OF INTERMIDIATE GEAR AND BUSH	1	NOT SUPLIED LOOSE
3	2H.038.02.0.00	THRUST WASHER	1	
4	DV0.011.04.0.00	THRUST WASHER (3.9MM THICK)	1	
5	DV0.010.06.0.00	THRUST WASHER (FOR INTERMEDIATE GEAR SUPPORT) 4.2 mm THICK	1	
6	DV0.010.04.0.00	THRUST WASHER (FOR INTERMEDIATE GEAR SUPPORT)	1	
7	DV0.010.03.0.00	RETAINER PATE (FOR GEAR SUPPORT)	1	
8	50.002.08.070.	SET BOLT - M8X1.25X70 - 8.8	3	
9	50.506.08.000.	PLAIN MACHINED WASHER - M8	3	
10	DV0.011.03.0.00	INTERMEDIATE GEAR SUPPORT (BETWEEN CAM AND FUE PUMP GEAR)	1	

TITLE: - K LUB OIL	**GROUP:** - DV0.559.1

SR.NO.	PART NO.	DESCRIPTION	QTY.	REMARKS
*1	82.110.15.1.00	K OIL SUPER 15 W 40 CF4	1	NOT ILLUSTRATED

TITLE: - KIT GROUP	**GROUP:** - DV0.178

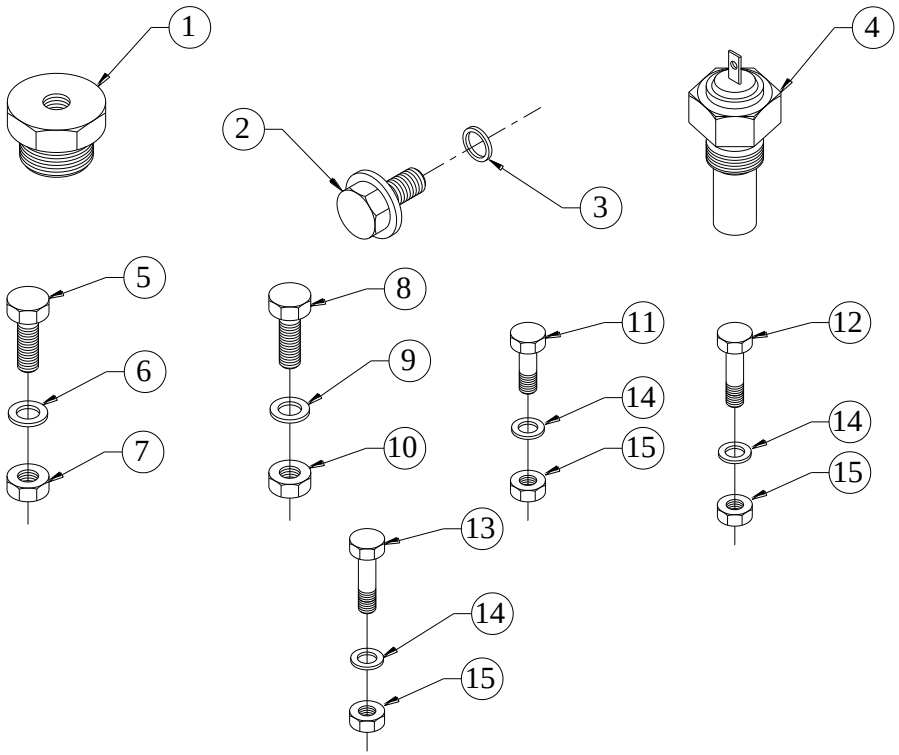

SR.NO.	PART NO.	DESCRIPTION	QTY.	REMARKS
1	DV0.507.19.0.00	ADAPTOR (M8 X1.25 - M27 X 1.5)	1	
2	50.602.14.000.	PLUG (M14X1.5)	1	
3	50.508.12.000.	COPPER WASHER (14X20)	1	
4	46.085.02.0.00	SENSOR UNIT (FOR ELEC TEMP GAUGE)	1	
5	50.003.20.050.	SET SCREW - M20X2.5X50 - 8.8	2	
6	50.506.20.000.	PLAIN MACHINED WASHER - M20	4	
7	50.006.20.000.	NUT - M20X2.5 - GR.8	2	
8	50.003.16.050.	SET SCREW - M16X2X50 - 8.8	2	
9	50.506.16.000.	PLAIN MACHINED WASHER - M16	4	
10	50.006.16.000.	NUT - M16X2 - GR.8.8	2	
11	50.002.14.065.	SET BOLT - M14X2X65 - 8.8	12	
12	50.002.14.040.	SET BOLT - M14X2X40 - 8.8	12	
13	50.002.14.050.	SET BOLT - M14X2X50 - 8.8	6	
14	50.506.14.000.	PLAIN MACHINED WASHER - M14	60	
15	4H.781.13.0.00	NYLOCK NUT FOR JCB LOGING (M14X 2)	30	

TITLE: - KIT GROUP FOR CC GENSET	**GROUP:** - DV8.509.2

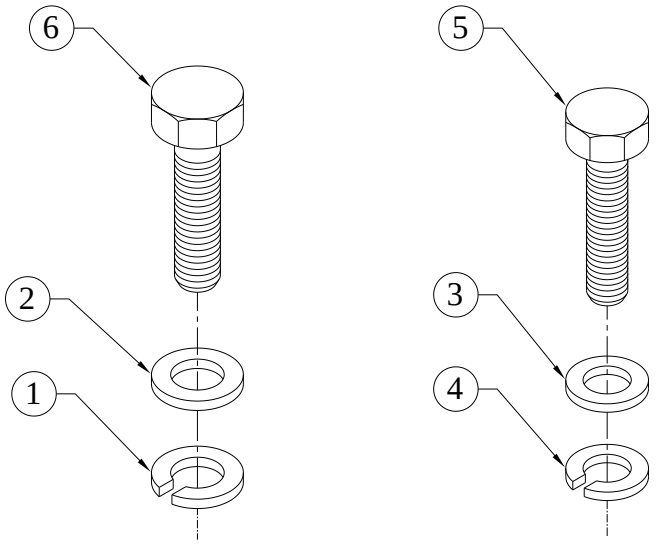

SR.NO.	PART NO.	DESCRIPTION	QTY.	REMARKS
1	50.505.12.000.	SPRING WASHER - M12	8	
2	F6.508.03.0.00	HARD WASHER(12 ID)	8	
3	50.506.10.000.	PLAIN MACHINED WASHER - M10	12	
4	50.505.10.000.	SPRING WASHER - M10	12	
5	50.003.10.035.	SET SCREW - M10X1.5X35 - 8.8	12	
6	50.003.12.035.	SET SCREW - M12X1.75X35 - 8.8	8	

TITLE: - KIT GROUP FOR EXHAUST	**GROUP:** - DV0.178.4

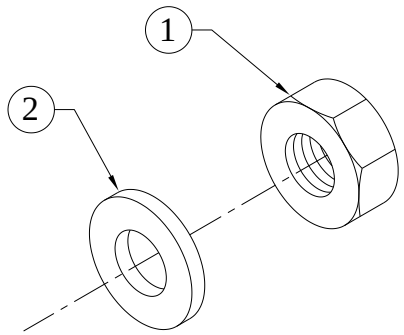

SR.NO.	PART NO.	DESCRIPTION	QTY.	REMARKS
1	50.080.10.000.	STAINLESS STEEL NUT M10-AISI-304	12	
2	50.506.10.000.	PLAIN MACHINED WASHER - M10	12	

TITLE: - LEAK OFF CLAMPING ARRANGEMENT	**GROUP:** - DV0.045

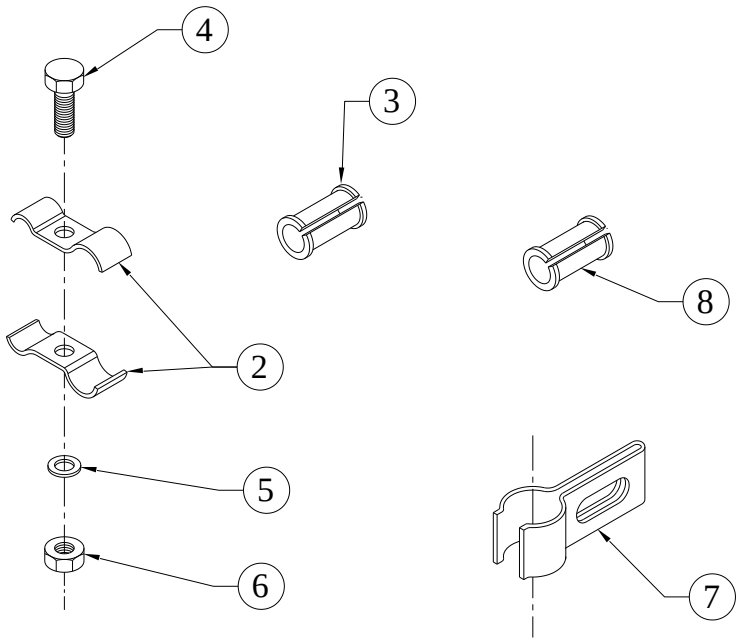

SR.NO.	PART NO.	DESCRIPTION	QTY.	REMARKS
*1	DV0.045.30.0.00	CLAMP ASSLY FOR LEAK OFF PIPE & H.P.PIPE	10	CONSISTING OF SR. NO. 2 TO 7
2	DV0.045.04.0.00	CLAMP FOR LEAK OFF PIPE & H.P.PIPE	2	
3	4H.031.07.0.00	RUBBER SLEEVE	1	
4	50.003.06.016.	SET SCREW - M6X1X16 - 8.8	1	
5	50.506.06.000.	PLAIN MACHINED WASHER - M6	1	
6	50.006.06.000.	NUT - M6X1 - GR.8	1	
7	04.574.07.0.00	CLIP FOR LUB OIL INLET PIPE	1	
8	4H.031.07.0.00	RUBBER SLEEVE	1	

TITLE: - LOOSE MATERIAL WITH DV10 EXPORT GENSET	**GROUP:** - DV0.806.19

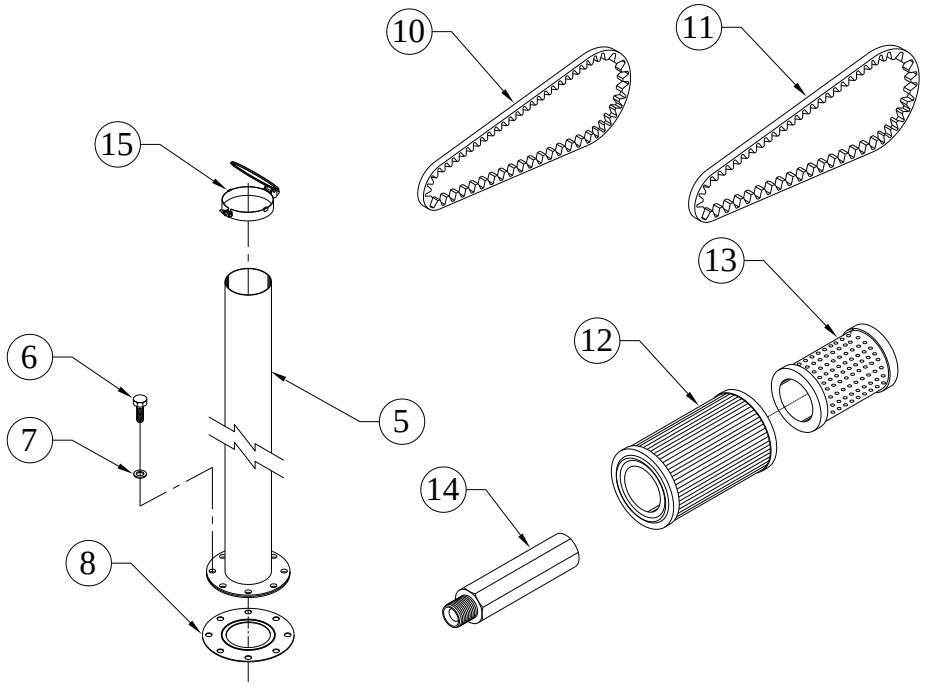

SR.NO.	PART NO.	DESCRIPTION	QTY.	REMARKS
*1	4H.1370.02.0.00	ENGINE TEST CERTIFICATE	1	NOT ILLUSTRATED
*2	4H.1370.03.0.00	GENSET TEST CERTIFICATE	1	NOT ILLUSTRATED
*3	4H.821.02.0.00	INSTALLATION SERVICE & MAINTENANCE MAUAL FOR AC GENERATOR OF STAMFORD MAKE WITH TEST CERFICATE	1	NOT ILLUSTRATED
*4	DV0.066.60.0.00	GENSET MANUAL FOR DV SERIES GENSET	1	NOT ILLUSTRATED
5	DV0.806.54.0.PR	TAIL PIPE FOR DV10 EXPORT (1650MM HEIGHT)	2	
6	50.003.20.050.	SET SCREW - M20X2.5X50 - 8.8	16	
7	50.506.20.000.	PLAIN MACHINED WASHER - M20	16	
8	F6.201.02.0.00	JOINT FOR EXHAUST SILENCER	2	
*9	4H.1370.04.0.00	APPLICATION BULLETINE(NO LOSS SYSTEM FOR RADIATOR)	1	NOT ILLUSTRATED
10	DV0.016.08.0.00	BELT V SECTION (BX 58- PITCH LENGTH 1520)	1	

TITLE: - LOOSE MATERIAL WITH DV10 EXPORT GENSET	**GROUP: -** DV0.806.19

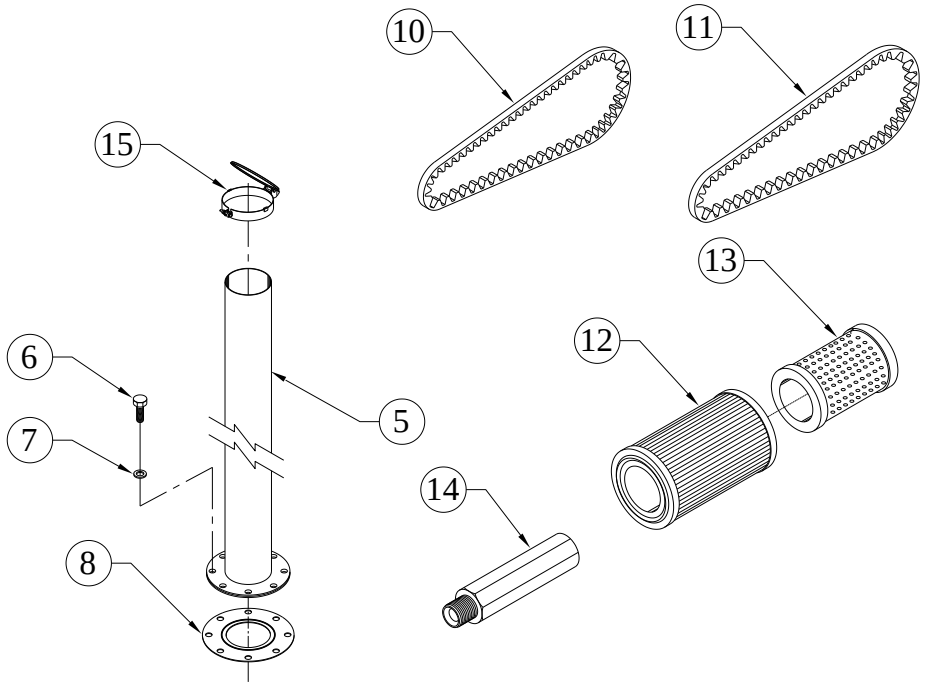

SR.NO.	PART NO.	DESCRIPTION	QTY.	REMARKS
11	DV0.016.25.0.00	V WRAPPED BELT (SPB AR-1230) X 3 Set	1	
12	KV2.505.02.0.00	AIR CLEANER PRIMARY ELEMENT FOR 12K22TA ENGINE FLEET GAURD 14"	2	
13	KV2.505.03.0.00	AIR CLEANER SAFETY ELEMENT FOR 12K22TA ENGINE FLEET GAURD 14"	2	
14	DV0.507.28.0.00	ADAPTOR FOR FUEL TANK DRAIN PLUG 500KVA SILENT SET	1	
15	DV2.806.23.0.PR	RAIN CAP ASSEMBLY FOR EXHAUST BEND	2	

TITLE: - LUB OIL COOLER, HEADER AND FILTER	**GROUP:** - DV0.014

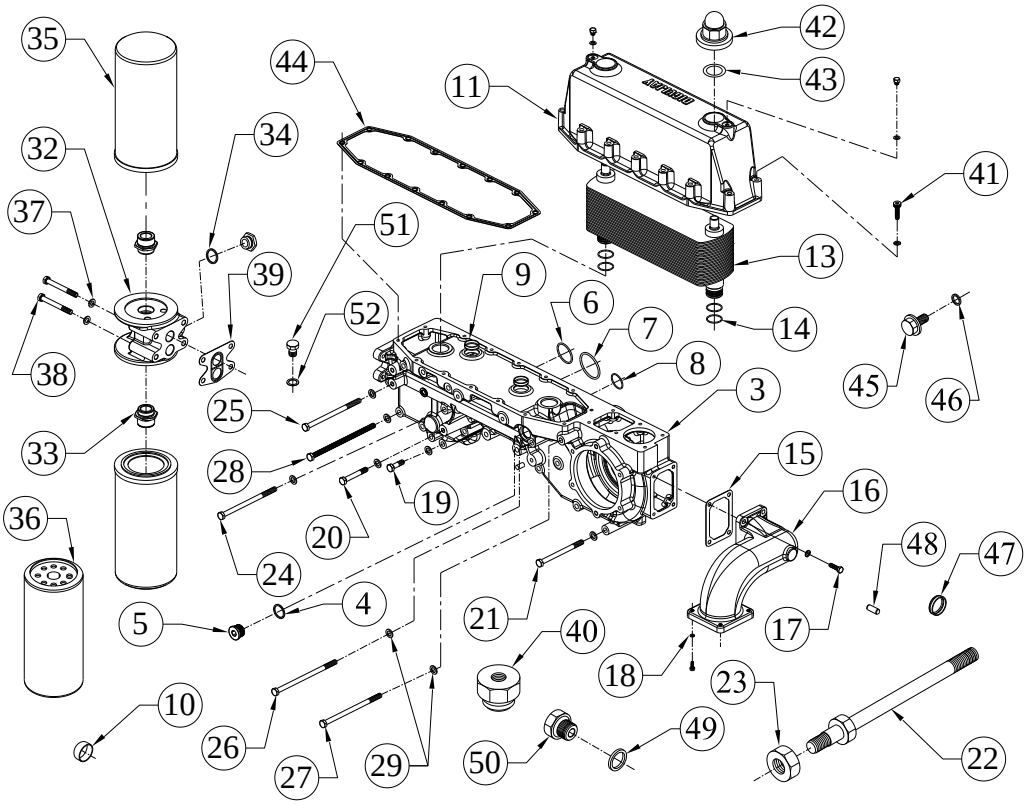

SR.NO.	PART NO.	DESCRIPTION	QTY.	REMARKS
*1	DV0.014.50.0.00	LUB OIL COOLER HEADER ASSLY	1	CONSISTING OF SR. NO. 2 & 11, 12, 15 TO 30 & 41 TO 52
*2	DV0.014.40.0.00	LUB OIL COOLER HEADER SUB-ASSLY	1	CONSISTING OF SR. NO.3 TO 10
3	DV0.014.04.0.00	LUB OIL COOLER HEADER	1	
4	50.508.32.000.	COPPER WASHER (28X33)	2	
5	50.610.27.000.	CORE PLUG(M27X2)-HEXAGONAL SOCKET HEAD(DIN 908)	1	
6	DV0.014.13.0.00	O RING (58 DIA) FOR L.O. HEADER	2	
7	DV0.014.14.0.00	O RING (67 DIA) FOR L.O. HEADER	2	
8	DV0.014.12.0.00	O RING (38 DIA)FOR L.O. HEADER	3	
9	F6.007.34.0.00	SEALING CAP	2	
10	F6.001.58.0.00	SEALING CAP.(40 DIN 443)	3	
11	DV0.014.39.0.00	LUB OIL COOLER COVER (MACHINING)	1	
*12	DV0.014.60.0.00	LUB OIL COOLER ASSLY (17 PLATES)	1	CONSISTING OF SR. NO.13,14

TITLE: - LUB OIL COOLER, HEADER AND FILTER	**GROUP:** - DV0.014

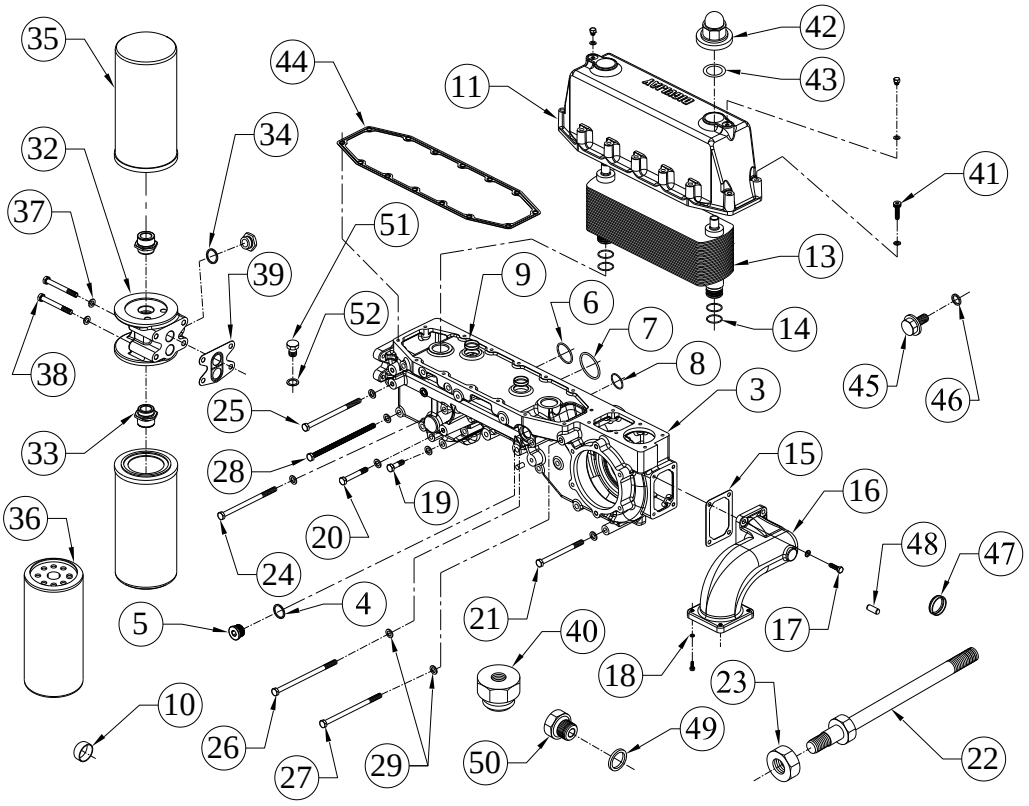

SR.NO.	PART NO.	DESCRIPTION	QTY.	REMARKS
13	DV0.014.01.0.00	LUB OIL COOLER (17 PLATES)	1	
14	DV0.014.23.0.00	O RING (DIA.29) FOR ELEMENT OIL COOLER	4	
15	DV0.014.16.0.00	JOINT (FOR WATER PUMP SUCTION)	1	
16	DV0.014.08.0.00	SUCTION TUBE (WITH FLANGED ENDS)	1	
17	50.003.08.030.	SET SCREW - M8X1.25X30 - 8.8	4	
18	50.506.08.000.	PLAIN MACHINED WASHER - M8	18	
19	50.002.10.035.	SET BOLT - M10X1.5X35 - 8.8	1	
20	50.002.10.070.	SET BOLT - M10X1.5X70 - 8.8	1	
21	50.002.10.130.	SET BOLT - M10X1.5X130 - 8.8	8	
22	DV0.044.11.0.00	STUD FOR ALTERNATOR	1	
23	50.006.10.000.	NUT - M10X1.5 - GR.8	1	
24	50.002.10.140.	SET BOLT - M10X1.5X140 - 8.8	1	
25	50.002.10.170.	SET BOLT - M10X1.5X170 - 8.8	2	
26	50.002.10.190.	SET BOLT - M10X1.5X190 - 8.8	1	
27	50.002.10.180.	SET BOLT - M10X1.5X180 - 8.8	1	

TITLE: - LUB OIL COOLER, HEADER AND FILTER	**GROUP:** - DV0.014

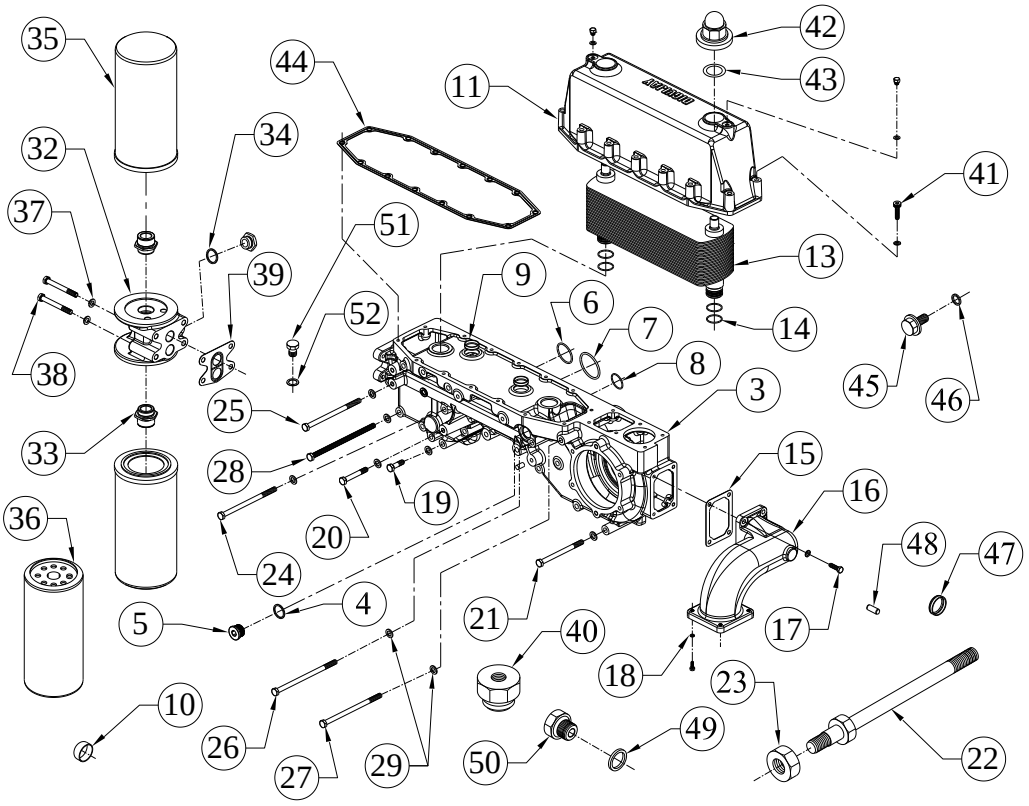

SR.NO.	PART NO.	DESCRIPTION	QTY.	REMARKS
28	50.002.10.200.	SET SCREW M10X1.5X200 LONG (8.8 GR)	3	
29	50.506.10.000.	PLAIN MACHINED WASHER - M10	20	
*30	DV0.014.20.0.00	FILTER HEADER SUB-ASSLY	1	CONSISTING OF SR. NO. 31 & 35 TO 40
*31	DV0.014.10.0.00	LUB OIL FILTER HEADER ASSLY (WITH ADAPTOR & CORE PLUG)	1	CONSISTING OF SR. NO.32 TO 34
32	DV0.014.05.0.00	FILTER HEADER	1	
33	DV0.014.07.0.00	THREADED ADAPTOR FOR HEADER	2	
34	50.508.32.000.	COPPER WASHER (28X33)	1	
35	DV0.014.11.0.00	LUB OIL FILTER	2	
36	DV0.014.27.0.00	LUB OIL FILTER - WITH KIRLOSKAR LOGO REVERSAL	1	
37	50.506.10.000.	PLAIN MACHINED WASHER - M10	4	
38	50.002.10.090.	SET BOLT - M10X1.5X90 - 8.8	4	
39	DV0.014.17.0.00	GASKET (LUB. OIL HEADER)	1	
40	DV0.507.19.0.00	ADAPTOR (M8 X1.25 - M27 X 1.5)	1	

TITLE: - LUB OIL COOLER, HEADER AND FILTER	**GROUP:** - DV0.014

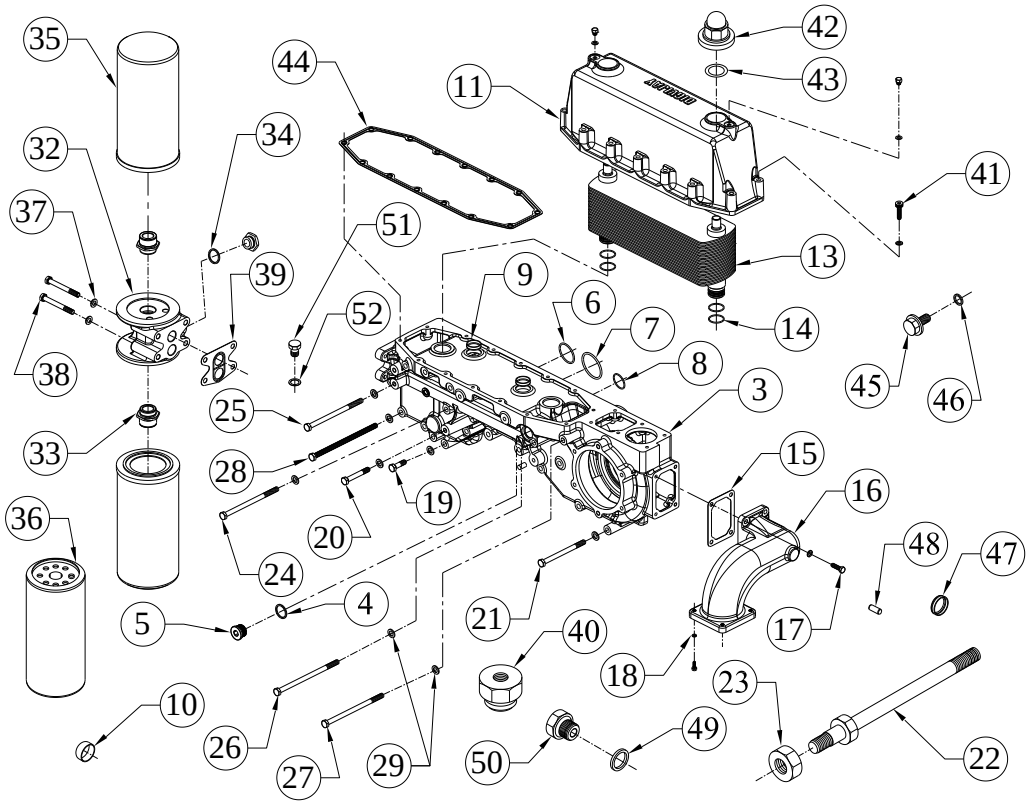

SR.NO.	PART NO.	DESCRIPTION	QTY.	REMARKS
41	50.076.08.040.	ALLEN SCREW	14	
42	DV0.014.43.0.00	DOME NUT FOR LUB OIL COOLER	2	
43	DV0.014.23.0.00	O RING (DIA.29) FOR ELEMENT OIL COOLER	2	
44	DV0.014.51.0.00	JOINT FOR COOLER COVER (MODIFIED)	1	
45	50.602.14.000.	PLUG (M14X1.5)	2	
46	50.508.12.000.	COPPER WASHER (14X20)	3	
47	F6.001.58.0.00	SEALING CAP.(40 DIN 443)	5	
48	50.401.10.030.	DOWEL PIN	2	
49	50.508.34.000.	COPPER WASHER (30X36)	2	
50	50.610.30.000.	CORE PLUG-HEXAGONAL SOCKET HEAD(DIN-908)	2	
51	34.001.35.0.00	PRECOATED PLUG (FOR OIL GALLERY)	3	
52	50.508.08.000.	COPPER WASHER (10X16)	4	

TITLE: - LUB OIL PUMP	**GROUP:** - DV0.013

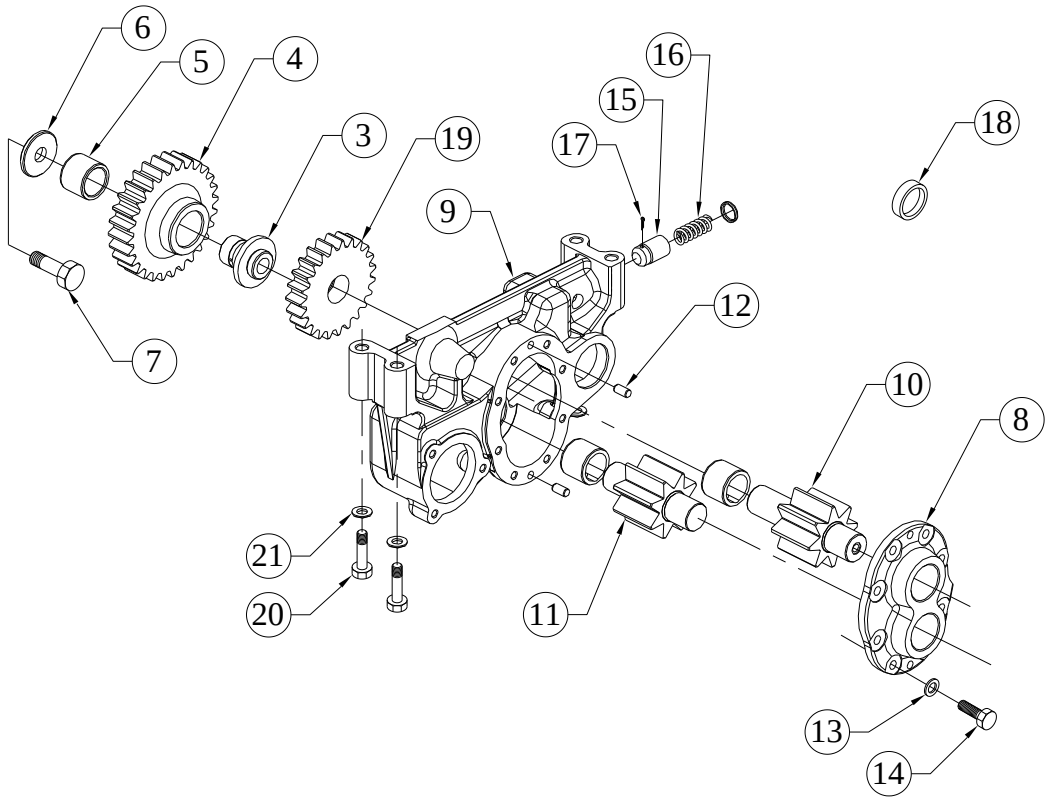

SR.NO.	PART NO.	DESCRIPTION	QTY.	REMARKS
*1	DV0.013.40.0.00	LUB OIL PUMP ASSEMBLY	1	CONSISTING OF SR. NO. 2 & 20, 21
*2	DV0.013.30.0.00	LUB OIL PUMP SUB-ASSEMBLY	1	CONSISTING OF SR. NO. 3 TO 19
3	DV0.013.08.0.00	INT.GEAR SUPPORT (FOR LUB OIL PUMP GEAR)	1	
4	DV8.013.07.0.00	INT. GEAR LOP	1	
5	DV0.013.22.0.00	BUSH FOR INT. GEAR. LOP	1	
6	DV0.013.12.0.00	WASHER (LUB OIL PUMP GEAR)	1	
7	50.052.14.075.	SET BOLT-M14X75-10.9	1	
8	DV2.013.10.0.00	LUB OIL PUMP BODY COVER SUB ASSLY	1	
9	DV0.013.20.0.00	LUB OIL PUMP BODY ASSEMBLY	1	
10	DV8.013.16.0.00	PUMPING GEAR (DRIVING)	1	
11	DV8.013.17.0.00	PUMPING GEAR (DRIVEN)	1	
12	50.401.08.016.	DOWEL PIN	2	
13	50.506.08.000.	PLAIN MACHINED WASHER - M8	8	

TITLE: - LUB OIL PUMP	**GROUP:** - DV0.013

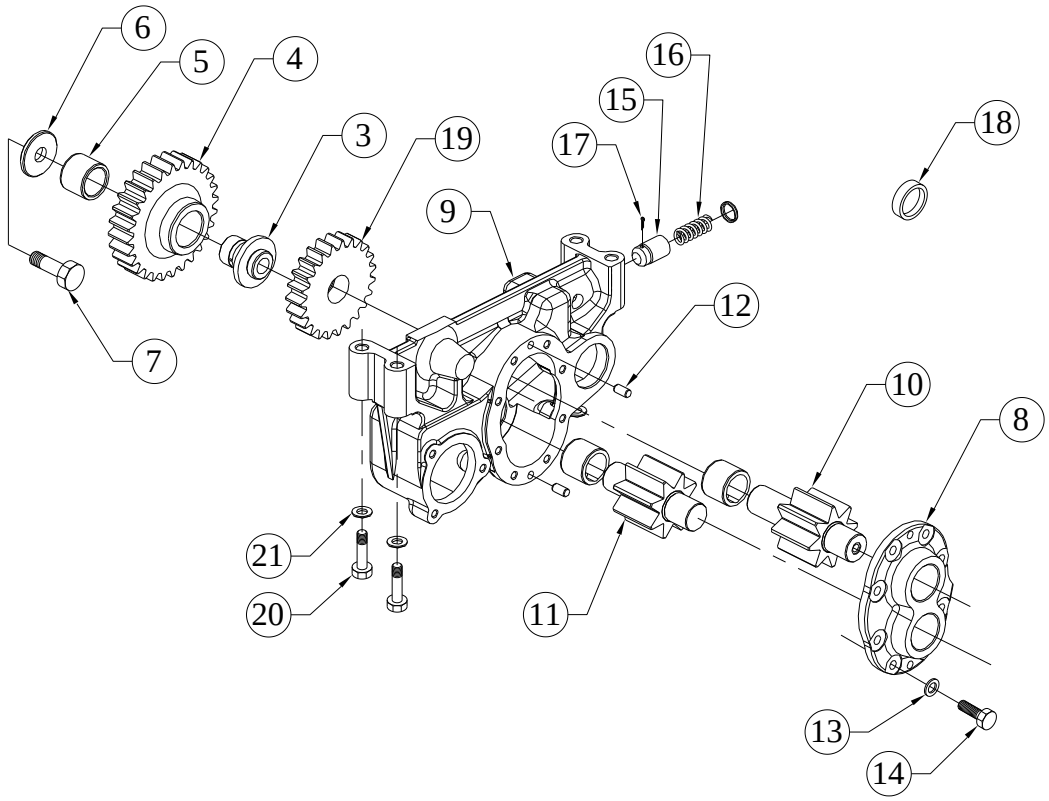

SR.NO.	PART NO.	DESCRIPTION	QTY.	REMARKS
14	50.003.08.025.	SET SCREW - M8X1.25X25 - 8.8	8	
15	DV0.013.09.0.00	RELIEF VALVE (FOR LUB OIL PUMP)	1	
16	DV0.013.11.0.00	SPRING (FOR RELIEF VALVE)	1	
17	50.001.05.056.	SPLIT COTTER PIN - 4X56	1	
18	DV0.013.15.0.00	VALVE CUP (FOR LUB OIL PUMP)	1	
19	DV8.013.06.0.00	DRIVING GEAR (LOP)	1	
20	50.002.10.070.	SET BOLT - M10X1.5X70 - 8.8	4	
21	50.506.10.000.	PLAIN MACHINED WASHER - M10	4	

TITLE: - LUB OIL SUMP AND DIPSTICK	**GROUP:** - DV0.017

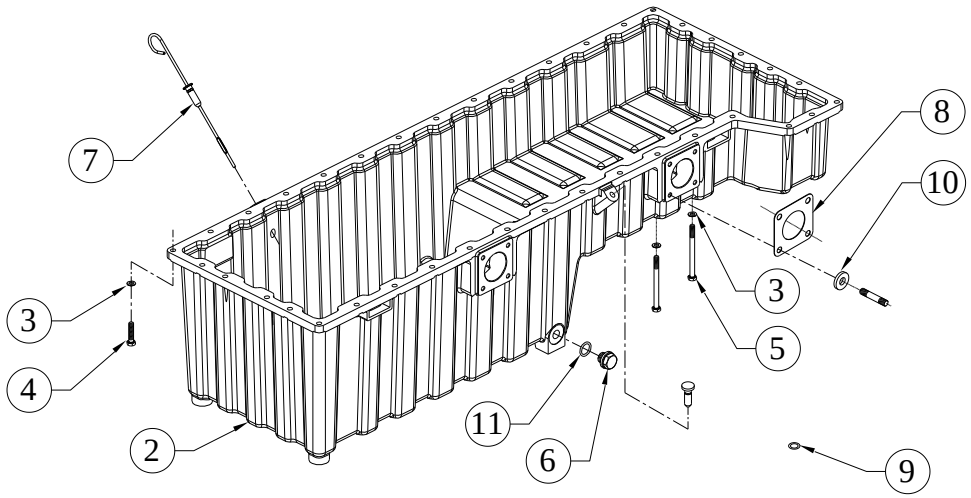

SR.NO.	PART NO.	DESCRIPTION	QTY.	REMARKS
*1	DV0.017.10.0.00	LUB OIL SUMP WITH DIPSTICK	1	CONSISTING OF SR. NO. 2 TO 11
2	DV0.017.03.0.00	LUB OIL SUMP	1	
3	50.506.08.000.	PLAIN MACHINED WASHER - M8	34	
4	50.003.08.030.	SET SCREW - M8X1.25X30 - 8.8	32	
5	50.002.08.105.	SET BOLT - M8X1.25X105 - 8.8	6	
6	2H.035.10.0.00	DRAIN PLUG ASSEMBLY.	2	
7	DV0.017.50.0.00	DIPSTICK WITH O RING	1	
8	DV0.041.07.0.00	GASKET BETWEEN OIL SUMP AND CENTRIFUGE ADAPTOR	1	
9	DV0.042.05.0.00	O RING (DIA. 36) FOR LUB.OIL DELIVERY TUBE	1	
10	03.716.03.0.00	WASHER(FUEL PUMP GEAR)	4	
11	F6.024.47.0.00	O - RING FOR DRAIN PLUG	2	

TITLE: - LUBE OIL DRAIN ARRANGEMENT FOR DV 10	**GROUP:** - DV0.056

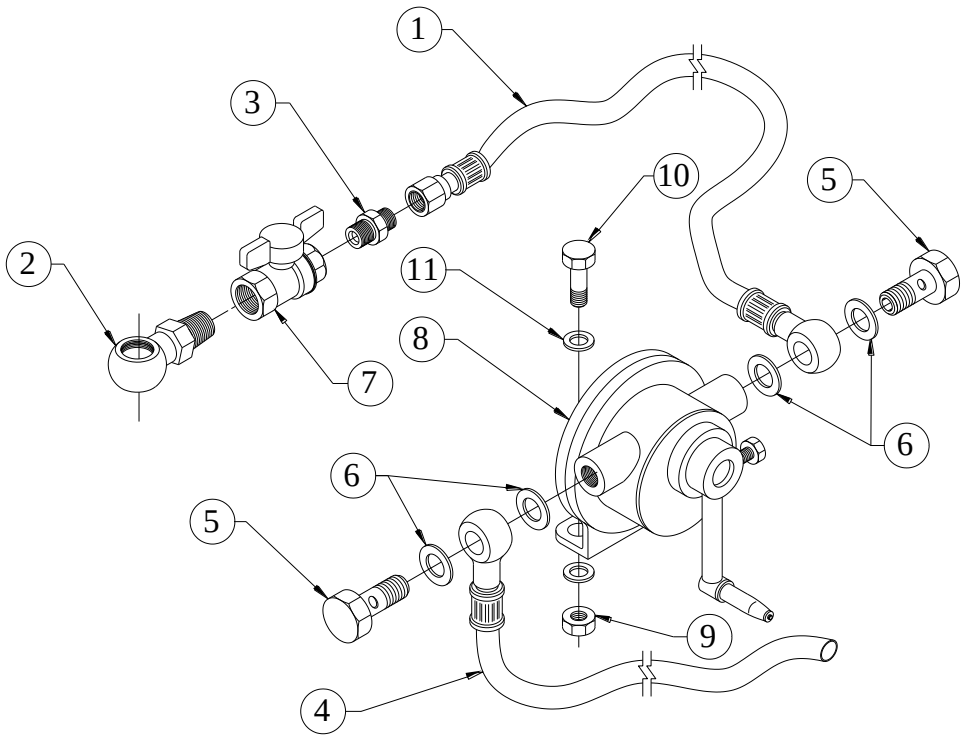

SR.NO.	PART NO.	DESCRIPTION	QTY.	REMARKS
1	03.189.06.0.00	DRAIN PIPE FOR LUB OIL SUMP FOR 19KVA PROJ.	1	
2	3H.147.03.0.00	ADAPTOR FOR OIL SUMP (MALE BOTH SIDE TYPE)	1	
3	3H.147.07.0.00	ADAPTOR FOR LUB OIL SUMP DRAIN 1/2" BSP AND M18X1.5	1	
4	DV0.507.11.0.00	DRAIN PIPE (FROM HAND PUMP 1200 MM)	1	
5	50.504.06.000.	BANJO BOLT - M18X1.5	2	
6	50.508.16.000.	COPPER WASHER (18X22)	4	
7	3H.153.11.0.00	DRAIN COCK	1	
8	40.085.16.0.00	ROTARY DRAIN PUMP	1	
9	50.006.10.000.	NUT - M10X1.5 - GR.8.8	2	
10	50.002.10.035.	SET BOLT - M10X1.5X35 - 8.8	2	
11	50.506.10.000.	PLAIN MACHINED WASHER - M10	4	

TITLE: -MATERIAL FOR "C" CHANNEL	**GROUP:** - DV2.031.28

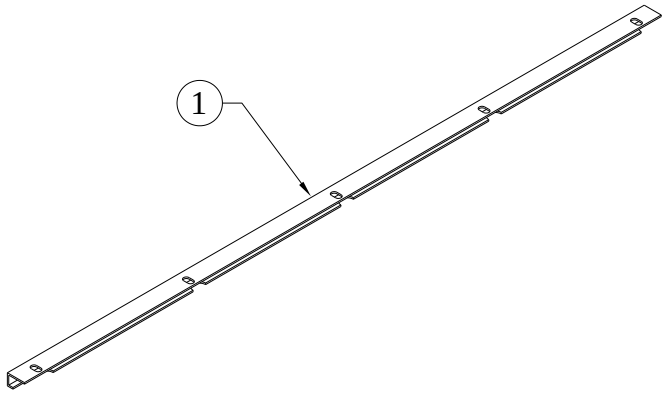

SR.NO.	PART NO.	DESCRIPTION	QTY.	REMARKS
1	DV2.031.28.0.PR	MATERIAL FOR "C" CHANNEL	2	

TITLE: - MICO ALTERNATOR 24 V	**GROUP:** - F6.639.2

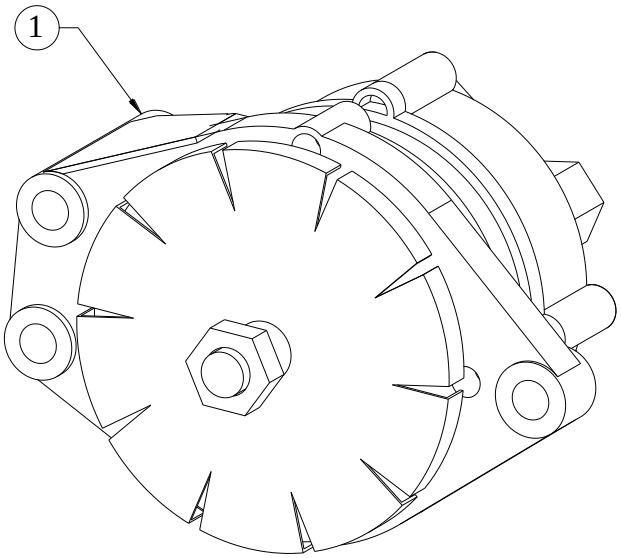

SR.NO.	PART NO.	DESCRIPTION	QTY.	REMARKS
1	F6.639.04.0.00	ALTERNATOR, (MICO- 24V, 45 AMP - W/O BLOCKING DIOD)	1	

TITLE: - MICO ALTERNATOR MOUNTING	**GROUP:** - DV0.062.2

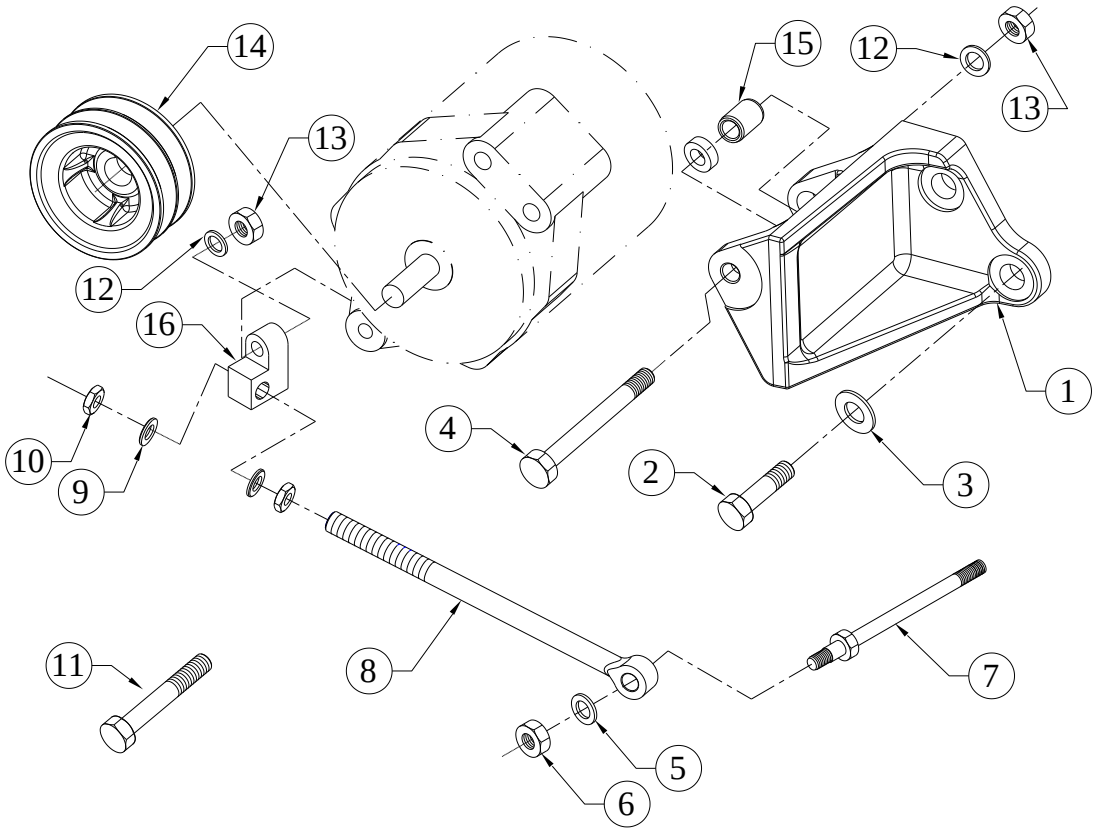

SR.NO.	PART NO.	DESCRIPTION	QTY.	REMARKS
1	DV0.044.14.0.00	CHARGING ALTERNATOR BRACKET	1	
2	50.002.16.040.	SET BOLT - M16X2X40 - 8.8	2	
3	50.506.16.000.	PLAIN MACHINED WASHER - M16	2	
4	DV0.044.15.0.00	DOWEL BOLT FOR MICO ALTERNATOR	1	
5	50.506.10.000.	PLAIN MACHINED WASHER - M10	1	
6	50.006.10.000.	NUT - M10X1.5 - GR.8	1	
7	DV0.044.11.0.00	STUD FOR ALTERNATOR	1	
8	DV0.044.13.0.00	EYE BOLT (FOR ALTERNATOR)	1	
9	50.506.14.000.	PLAIN MACHINED WASHER - M14	2	
10	50.006.14.000.	NUT - M14X2 - GR.8.8	4	
11	50.002.12.070.	SET BOLT - M12X1.75X70 - 8.8	1	
12	50.506.12.000.	PLAIN MACHINED WASHER - M12	6	
13	50.006.12.000.	NUT - M12X1.75 - GR.8	4	
14	DV0.044.08.0.00	ALTERNATOR PULLEY	1	
15	DV0.044.04.0.00	DOWEL BUSH (FOR ALT.MTG. BRACKET)	1	
16	DV0.044.12.0.00	SWIVEL PIECE	1	

TITLE: - OIL & FUEL PIPINGS	**GROUP:** - DV0.069

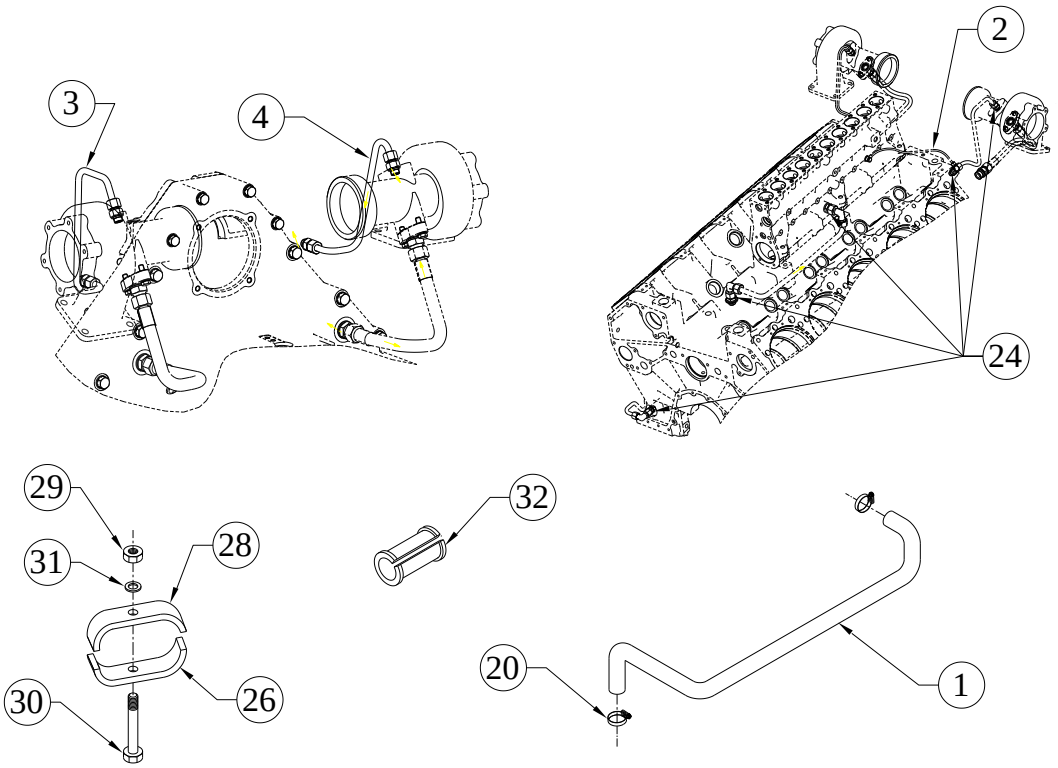

SR.NO.	PART NO.	DESCRIPTION	QTY.	REMARKS
1	DV0.069.65.0.00	OIL DRAIN PIPE (FROM FIP TO CRANK CASE)	1	
2	DV0.022.09.0.00	OIL SUPPLY PIPE (CRANKCASE TO FUEL PUMP IN)	1	
3	DV0.032.28.0.00	OIL SUPPLY PIPE L.H. FOR MODIFIED MANIFOLD (CRANKCASE TO T/C IN)	1	
4	DV0.032.29.0.00	OIL SUPPLY PIPE R.H.FOR MODIFIED MANIFOLD (CRANKCASE TO T/C IN)	1	
*5	DV0.022.110.0.0	FUEL PIPE ASSEMBLY (FLEXIBLE)	1	CONSISTING OF SR. NO. 6 TO 13
6	DV0.022.71.0.00	FUEL PIPE FOR FILTER TO PUMP (FLEXIBLE)	1	
7	DV0.022.72.0.00	FUEL PIPE FOR FEED PUMP TO FILTER (FLEXIBLE)	1	
8	DV0.022.73.0.00	FEED PUMP FUEL IN PIPE (FLEXIBLE)	1	

TITLE: - OIL & FUEL PIPINGS	**GROUP:** - DV0.069

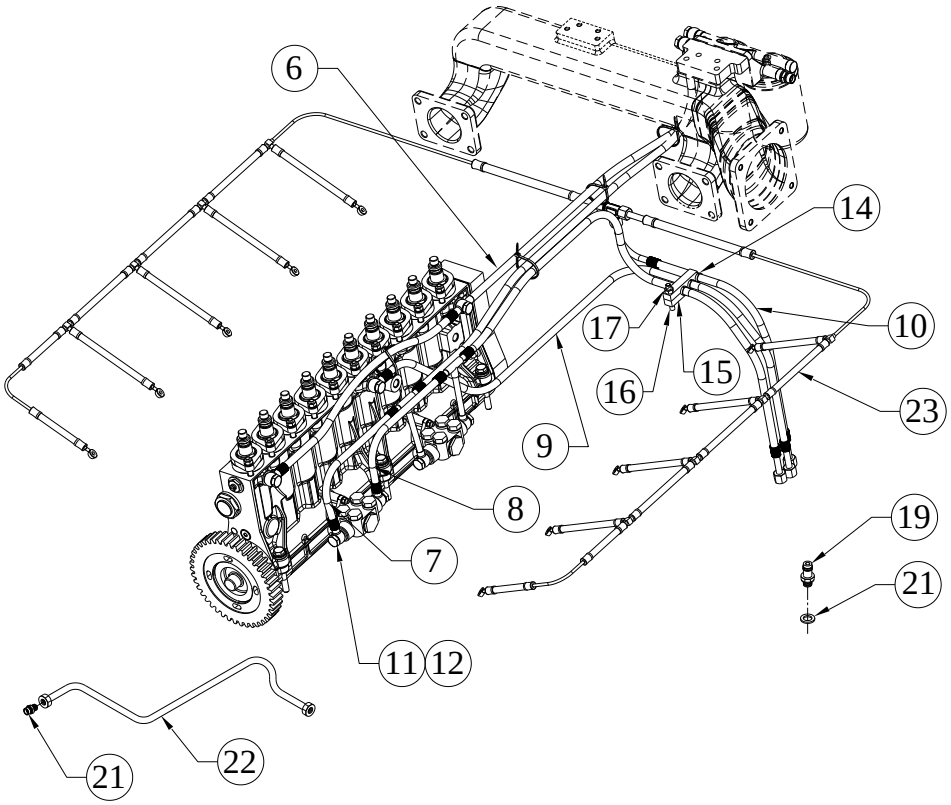

SR.NO.	PART NO.	DESCRIPTION	QTY.	REMARKS
9	DV0.022.74.0.00	FUEL PIPE FOR PUMP LEAK OFF (FLEXIBLE)	1	
10	DV0.022.76.0.00	FUEL PIPE FOR NOZZLE LEAK OFF (FLEXIBLE)	1	
11	50.508.12.000.	COPPER WASHER (14X20)	29	
12	50.504.04.000.	BANJO BOLT - M14X1.5	9	
*13	DV0.022.120.0.0	CLAMP ASSEMBLY FOR LOW PRESSURE 3 PIPE	1	CONSISTING OF SR. NO. 14 TO 17
14	DV0.022.78.0.00	RUBBER SLEEVE FOR LOW PRESSURE 3 PIPE CLAMP	3	
15	DV0.022.77.0.00	CLAMP FOR LOW PRESSURE (3 PIPE)	2	
16	50.010.08.040.	STUD - M8X1.25X40 - 8.8	1	
17	50.006.08.000.	NUT- M8X1.25 - GR.8	1	
*18	DV0.022.86.0.PR	CLAMP (2 PIPE)	6	NOT ILLUSTRATED
19	DV0.069.47.0.00	ADAPTOR	2	
20	50.519.04.0.00	WORM DRIVE HOSE CLIP (25 MM)	2	

TITLE: - OIL & FUEL PIPINGS	**GROUP:** - DV0.069

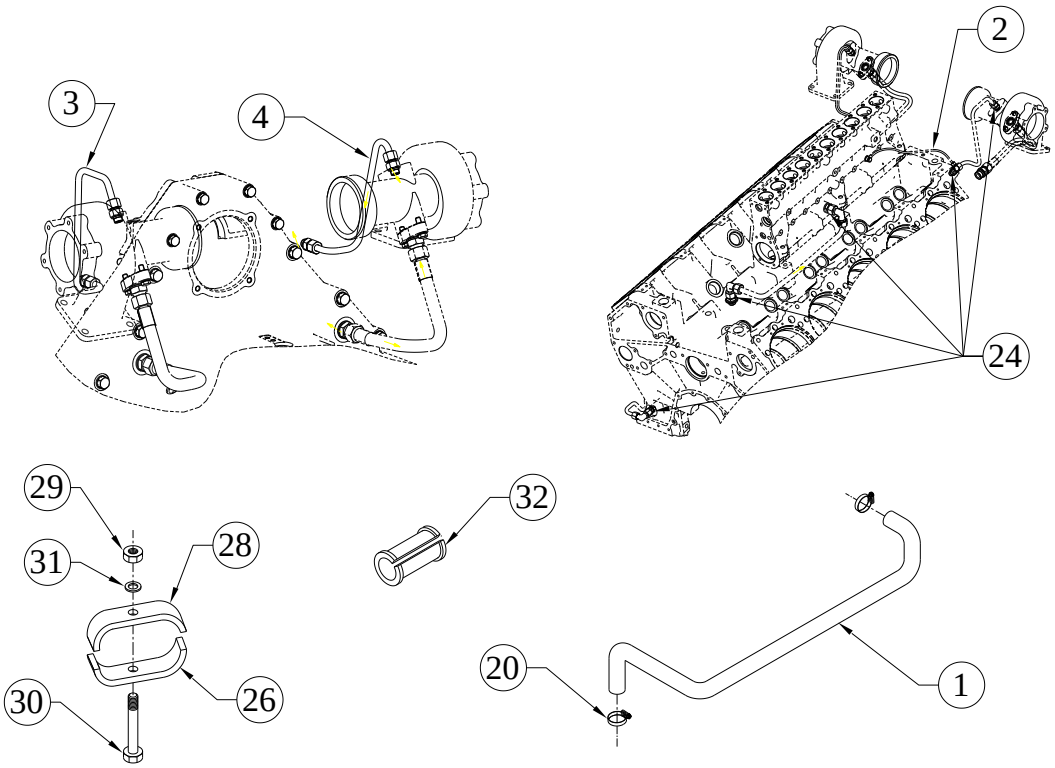

SR.NO.	PART NO.	DESCRIPTION	QTY.	REMARKS
21	50.508.13.000.	COPPER WASHER (16X20)	2	
22	DV0.041.80.0.00	OIL INLET PIPE ASSLY.(FROM CRANKCASE TO CENTRIFUGE FILTER)	1	
23	DV0.069.85.0.00	LEAK OFF PIPE (UNIFLEX)	1	
24	DV0.069.04.0.00	ADAPTOR (FOR FUEL PIPE)	6	
*25	4H.031.30.0.00	CLAMP ASSEMBLY(WITHOUT RUBBER SLEEVE)	1	CONSISTING OF SR. NO. 26 & 27
26	4H.031.06.0.00	CLAMP	1	
*27	4H.031.10.0.00	CLAMP SUB ASSLY	1	CONSISTING OF SR. NO. 28 & 29
28	4H.031.06.0.00	CLAMP	1	
29	50.006.06.000.	NUT - M6X1 - GR.8	1	
30	50.003.06.025.	SET SCREW - M6X1X25 - 8.8	1	
31	50.506.06.000.	PLAIN MACHINED WASHER - M6	1	
32	4H.031.07.0.00	RUBBER SLEEVE	2	

TITLE: - OILSEAL PULLEY END	**GROUP:** - DV0.012

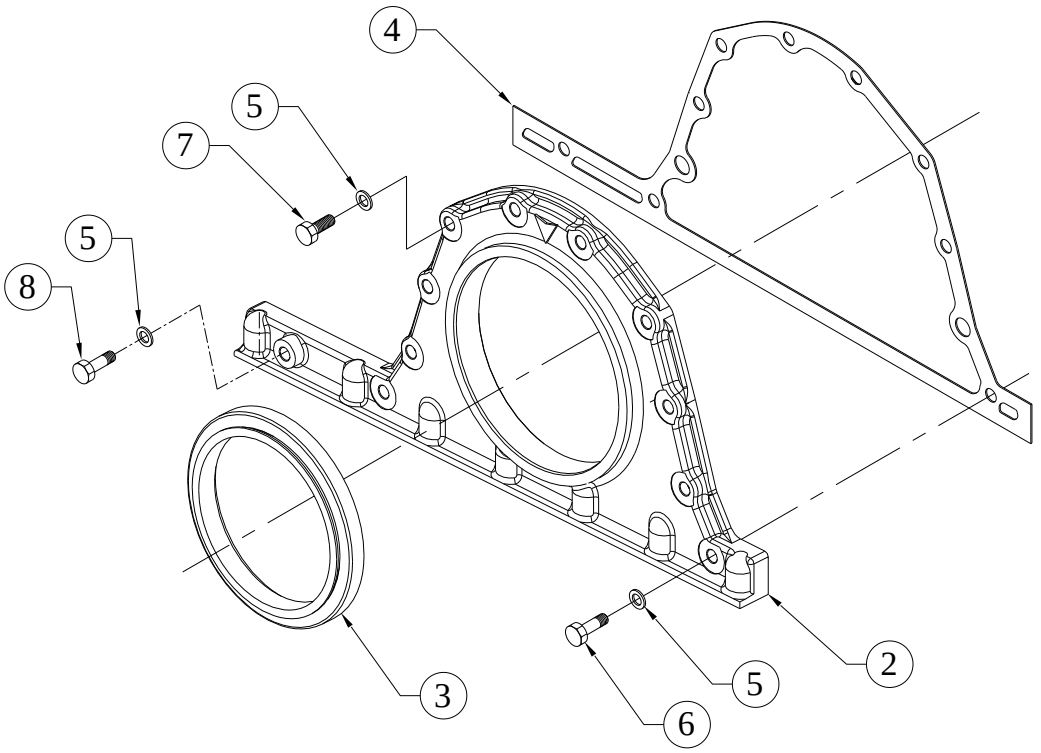

SR.NO.	PART NO.	DESCRIPTION	QTY.	REMARKS
*1	DV0.012.10.0.00	OIL SEAL HSG (SUB ASSEMBLY)	1	CONSISTING OF SR. NO. 2 TO 8
2	DV0.012.01.0.00	OIL SEAL HOUSING	1	
3	DV0.012.02.0.00	OIL SEAL PULLEY END	1	
4	DV0.012.03.0.00	JOINT (FOR OIL SEAL HOUSING)	1	
5	50.506.08.000.	PLAIN MACHINED WASHER - M8	11	
6	50.002.08.040.	SET BOLT - M8X1.25X40 - 8.8	1	
7	50.003.08.030.	SET SCREW - M8X1.25X30 - 8.8	8	
8	50.002.08.035.	SET BOLT - M8X1.25X35 - 8.8	2	

TITLE: - PISTON	**GROUP:** - DV0.006

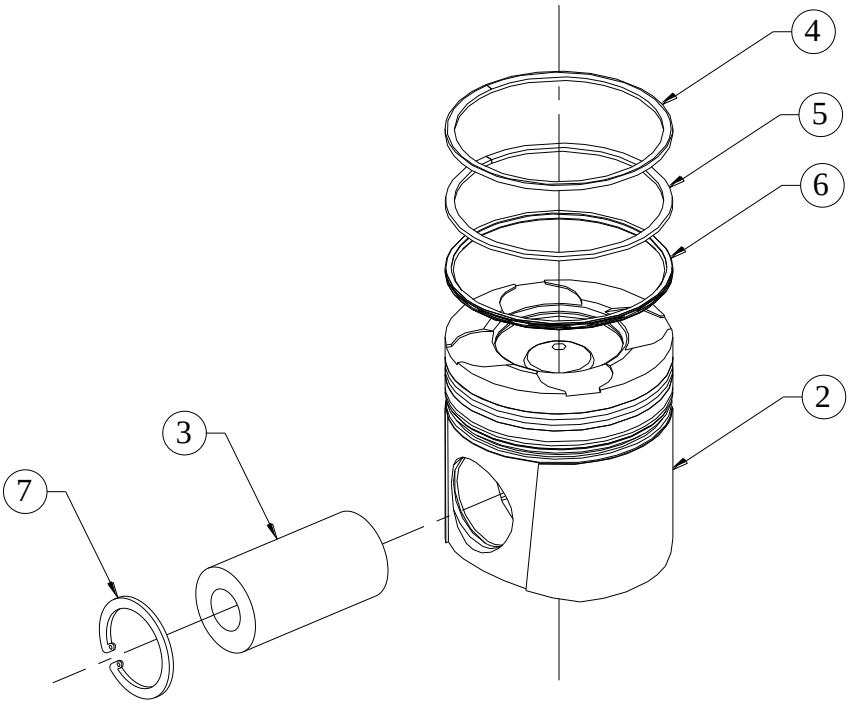

SR.NO.	PART NO.	DESCRIPTION	QTY.	REMARKS
*1	DV0.006.10.0.00	PISTON ASSEMBLY	1	CONSISTING OF SR. NO. 2 TO 7
2	DV0.006.01.0.00	PISTON (130 DIA)	1	NOT SUPPLIED LOOSE
3	DV0.006.02.0.00	PISTON PIN	1	
4	DV0.006.03.0.00	TOP RING	1	NOT SUPPLIED LOOSE
5	DV0.006.04.0.00	SECOND RING	1	NOT SUPPLIED LOOSE
6	DV0.006.05.0.00	OIL CONTROL RING	1	NOT SUPPLIED LOOSE
7	DV0.006.06.0.00	CIRCLIP (FOR PISTON)	2	

TITLE: - POWER HARNESS FROM ALTERNATOR TO CONTROL PANEL, (WITH UNINYWIN CABLE.)	**GROUP:** - DV0.906.2

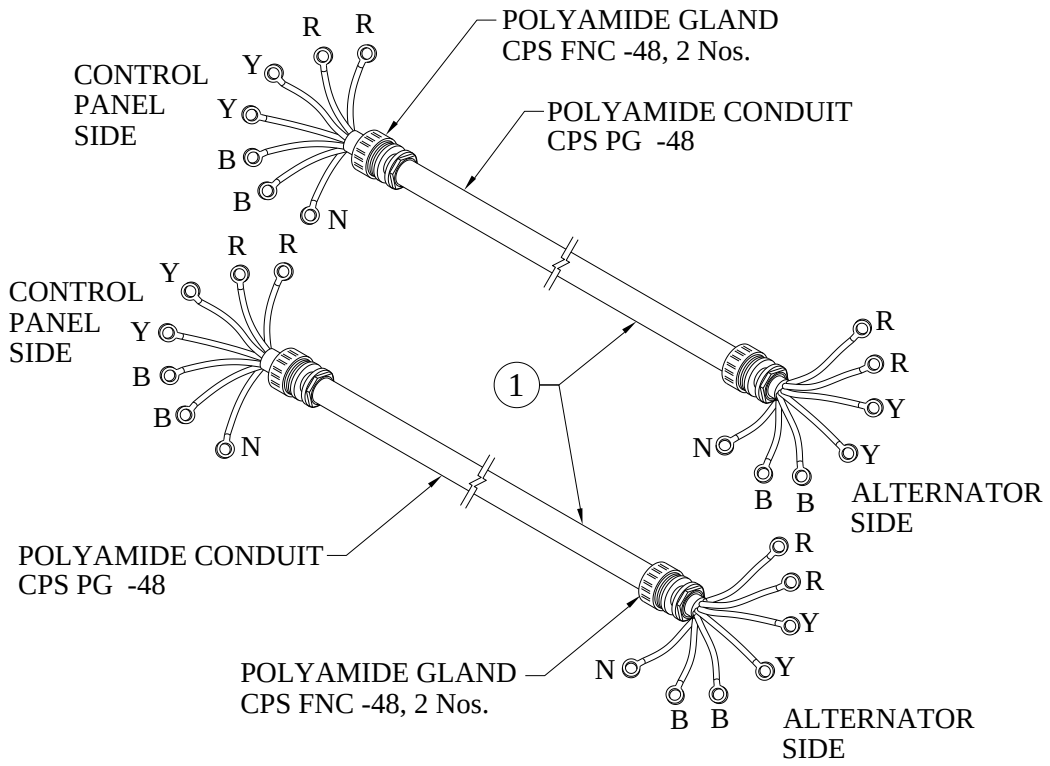

SR.NO.	PART NO.	DESCRIPTION	QTY.	REMARKS
1	DV0.906.30.0.00	POWER HARNESS ASSEMBLY FROM ALTERNATOR TO CONTROL PANEL,(WITH UNINYWIN CABLE .)	1	

TITLE: - PREFILTER	**GROUP:** - DV0.053

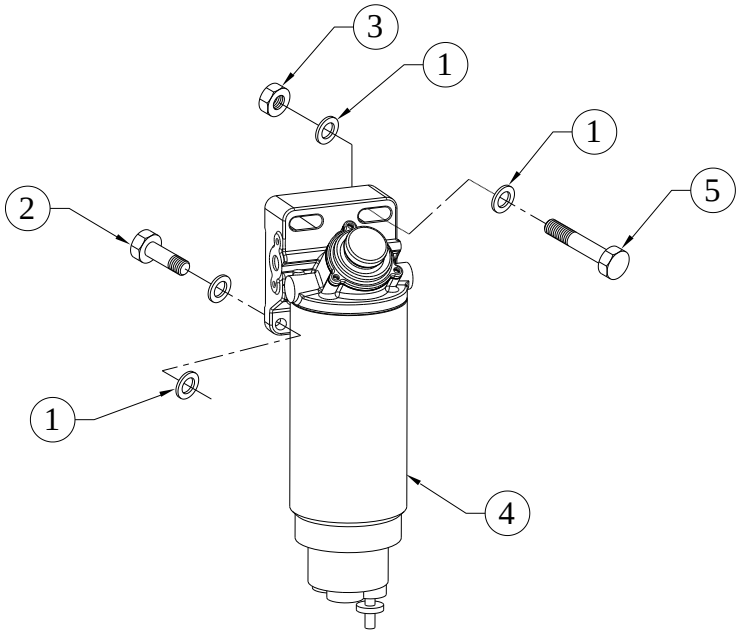

SR.NO.	PART NO.	DESCRIPTION	QTY.	REMARKS
1	50.548.10.000.	SPECIAL PLAIN WASHER - M10	8	
2	50.002.10.040.	SET BOLT - M10X1.5X40 - 8.8	2	
3	50.006.10.000.	NUT - M10X1.5 - GR.8	4	
4	DV0.053.04.0.00	PRELINE FILTER (WITHOUT WATER LEVEL SENSOR) MICO F 002 H22 026	1	
5	50.002.10.075.	SET BOLT - M10X1.5X75 - 8.8	2	

TITLE: - PROTECTION CAPS	**GROUP:** - DV0.075

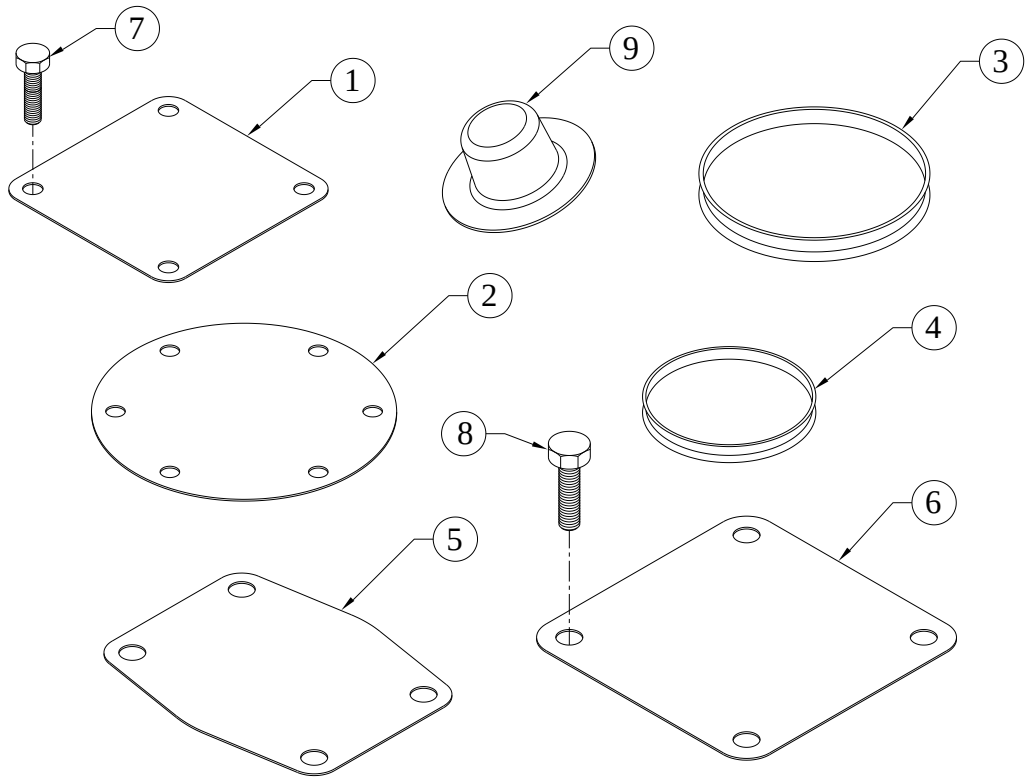

SR.NO.	PART NO.	DESCRIPTION	QTY.	REMARKS
1	DV0.075.01.0.00	PLASTIC CAP (WATER INLET)	1	
2	DV0.075.02.0.00	PLASTIC CAP (TURBOCHARGER EXHAUST)	2	
3	DV0.075.03.0.00	PLASTIC CAP (TURBOCHARGER AIR INLET)	2	
4	DV0.075.04.0.00	PLASTIC CAP (THERMOSAT OUTLET)	1	
5	DV0.075.06.0.00	PLASTIC CAP (CAC OUTLET)	1	
6	DV0.075.07.0.00	PLASTIC CAP (CAP INLET)	1	
7	50.003.08.025.	SET SCREW - M8X1.25X25 - 8.8	4	
8	50.003.10.030.	SET SCREW - M10X1.5X30 - 8.8	8	
9	22.078.04.0.00	PLUG FOR BREATHER TUBE	1	

TITLE: - RADIATOR HOSES & HOSE CLIPS	**GROUP:** - DV0.031.1

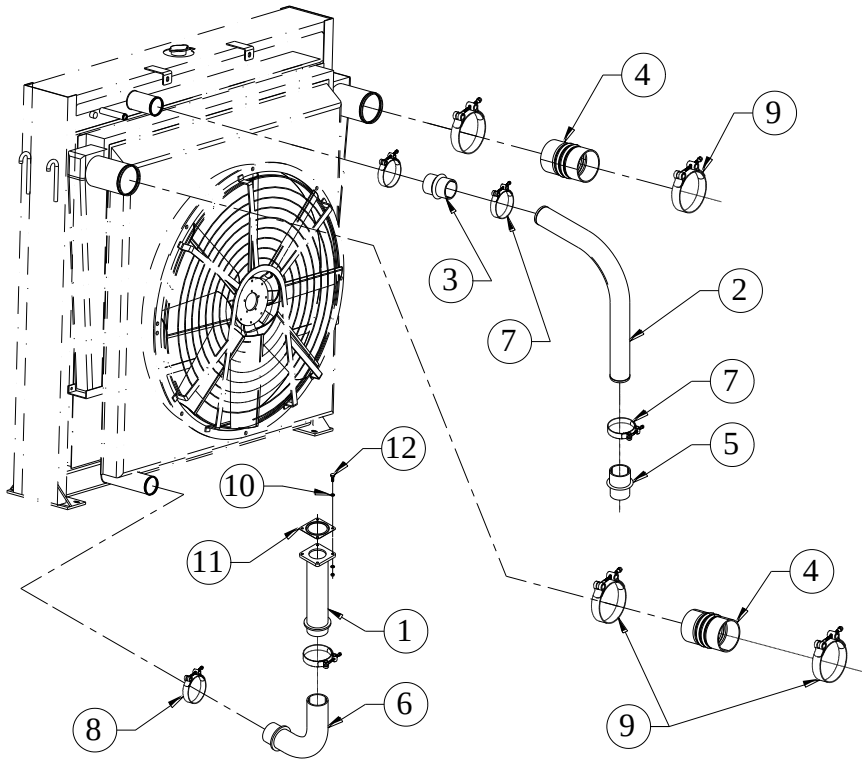

SR.NO.	PART NO.	DESCRIPTION	QTY.	REMARKS
1	DV8.035.20.0.00	SUCTION PIPE (FROM RADIATOR TO ENGINE)	1	
2	DV0.014.26.0.00	METALIC PIPE FROM THERMOSTAT TO RAD.	1	
3	DV0.014.24.0.00	HOSE (RADIATOR TO SUCTION PIPE)	1	
4	DV0.031.03.0.00	HOSE, CAC	2	
5	DV0.014.33.0.00	HOSE BETWEEN PIPE & THERMOSTAT	1	
6	DV0.048.02.0.00	HOSE (RAD TO ENGINE)	1	
7	06.713.03.0.00	T- BOLT CLAMP (90 MM)	3	
8	F6.377.16.0.00	JUPITER T -BOLT CLAMP S/F 83MM O.D	1	
9	KV0.505.14.0.00	HOSE T BOLT CLAMP FOR OD 137MM JUPITOR JT6 A20 137DN OR EQUIVALENT	4	
10	50.506.08.000.	PLAIN MACHINED WASHER - M8	4	
11	DV0.014.18.0.00	JOINT FOR SUCTION PIPE ASSLY	1	
12	50.003.08.035.	SET SCREW - M8X1.25X35 - 8.8	4	

TITLE: - RADIATOR SUPPORT	**GROUP:** - DV0.049.1

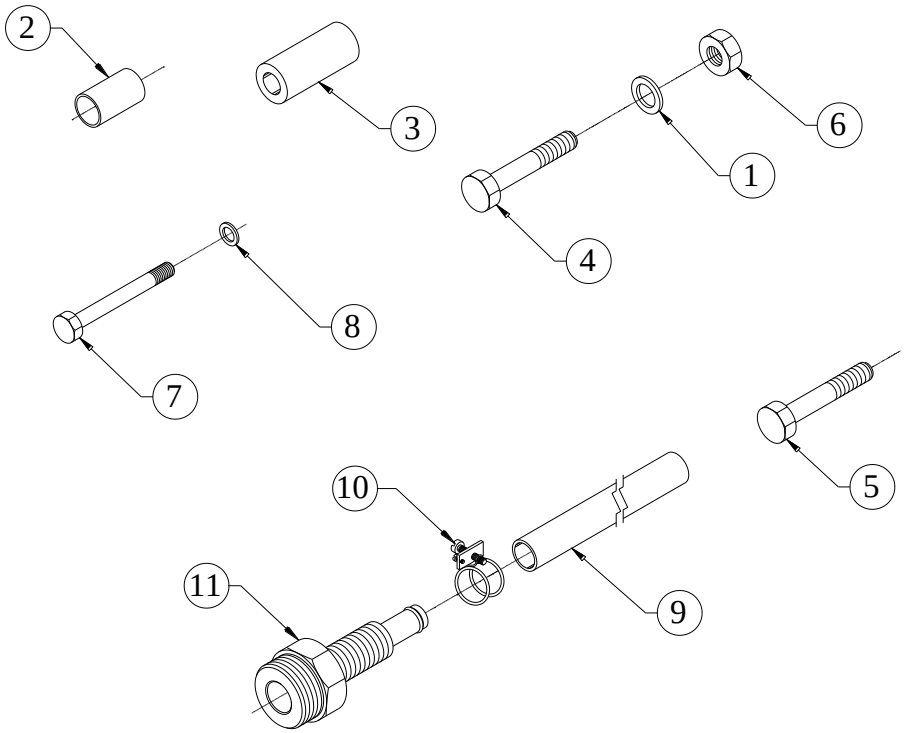

SR.NO.	PART NO.	DESCRIPTION	QTY.	REMARKS
1	50.506.10.000.	PLAIN MACHINED WASHER - M10	12	
2	F6.026.04.0.00	SPACER SLEEVE.	4	
3	03.198.02.0.00	SPACER (BAR)	4	
4	50.002.10.080.	SET BOLT - M10X1.5X80 - 8.8	4	
5	50.002.10.070.	SET BOLT - M10X1.5X70 - 8.8	4	
6	50.006.10.000.	NUT - M10X1.5 - GR.8.8	4	
7	50.002.14.045.	SET BOLT - M14X2X45 - 8.8	4	
8	50.506.14.000.	PLAIN MACHINED WASHER - M14	4	
9	3H.153.01.0.00	RADIATOR DRAIN PIPE (1200MM LENGTH)	1	
10	2H.112.01.0.00	SPRING BAND CLIP (KLIPCO/ NOMINAL DIA. 10)	1	
11	3H.153.02.0.00	ADAPTOR FOR DRAIN COCK	1	

TITLE: - ROCKER COVER	**GROUP:** - DV0.009

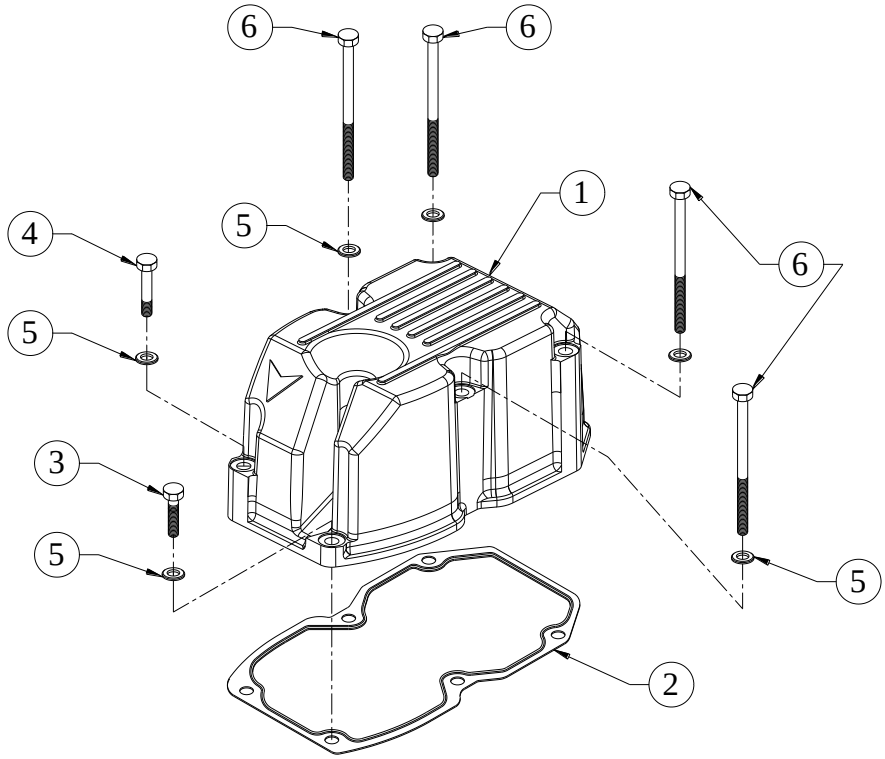

SR.NO.	PART NO.	DESCRIPTION	QTY.	REMARKS
1	DV0.009.01.0.00	ROCKER COVER	1	
2	DV0.009.05.0.00	JOINT FOR ROCKER COVER (METALLIC GASKET)	1	
3	50.003.08.025.	SET SCREW - M8X1.25X25 - 8.8	1	
4	50.002.08.055.	SET BOLT - M8X1.25X55 - 8.8	1	
5	50.506.08.000.	PLAIN MACHINED WASHER - M8	6	
6	50.002.08.100.	SET BOLT - M8X1.25X100 - 8.8	4	

TITLE: - ROCKER COVER (WITH BREATHER)	**GROUP:** - DV2.009.2

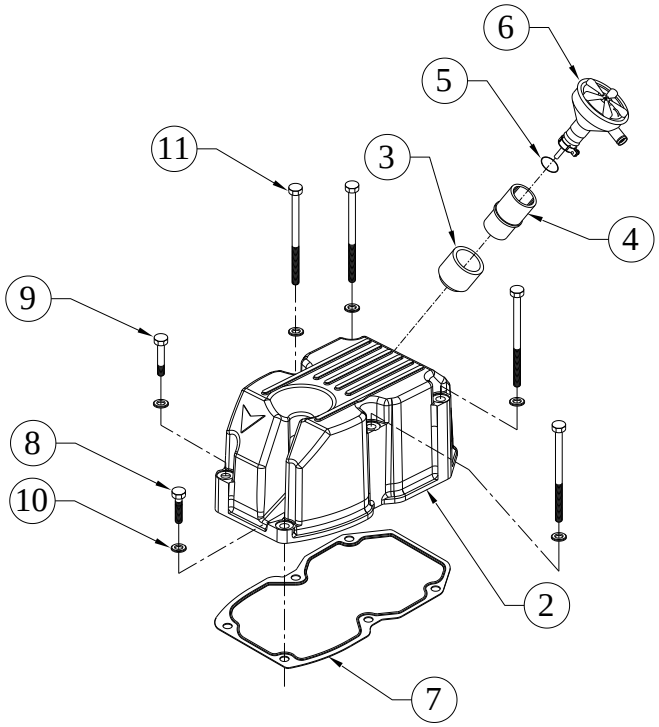

SR.NO.	PART NO.	DESCRIPTION	QTY.	REMARKS
*1	DV2.009.20.0.00	ROCKER COVER ASSLY WITH BREATHER-625 KVA	1	CONSISTING OF SR. NO. 2 TO 5
2	DV2.009.02.0.00	ROCKER COVER-625 KVA(WITH BREATHER HOLE ON REGULAR COVER)	1	
3	DV0.046.31.0.00	SLEEVE FOR ROCKER COVER (BREATHER)	1	
4	DV0.046.08.0.00	BREATHER SLEEVE	1	
5	DV0.046.09.0.00	`O' RING	1	
6	DV0.046.07.0.00	CRANKCASE BREATHER (DV ENGINE)	1	
7	DV0.009.05.0.00	JOINT FOR ROCKER COVER (METALLIC GASKET)	1	
8	50.003.08.025	SET SCREW - M8X1.25X25 - 8.8	1	
9	50.002.08.055	SET BOLT - M8X1.25X55 - 8.8	1	
10	50.506.08.000	PLAIN MACHINED WASHER - M8	6	
11	50.002.08.100	SET BOLT - M8X1.25X100 - 8.8	4	

TITLE: - SET OF STICKERS FOR DV8, DV10 & DV12	**GROUP:** - DV0.178.3

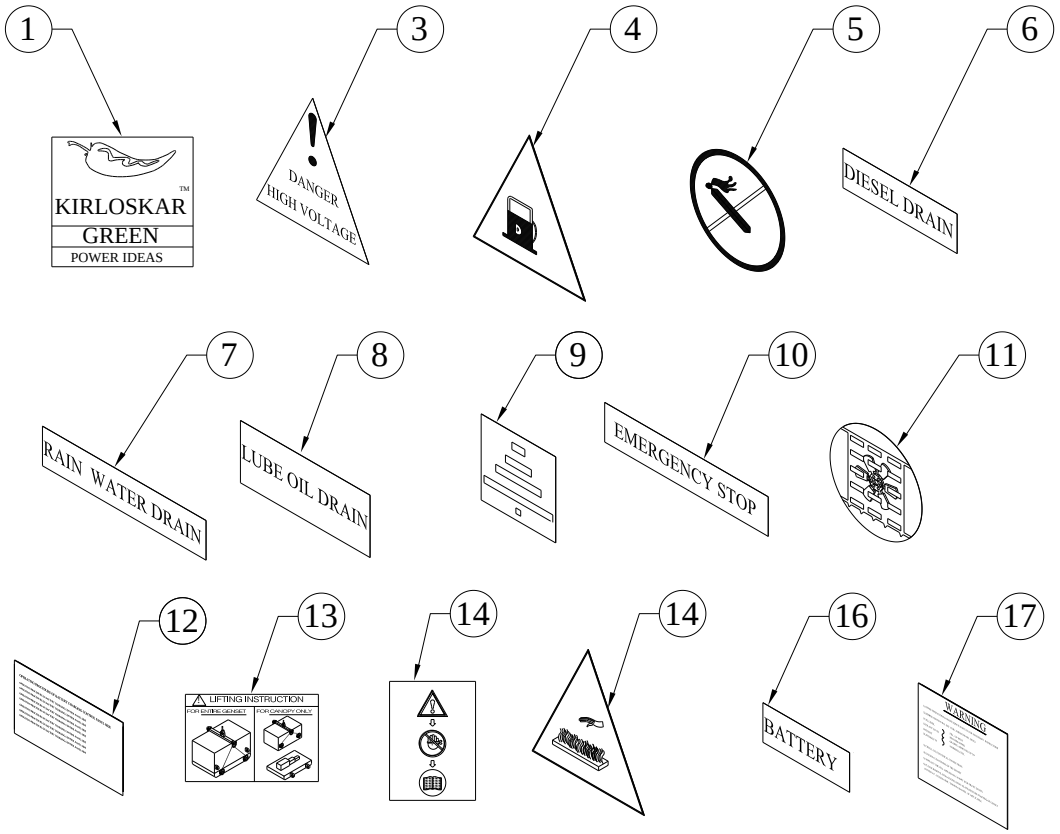

SR.NO.	PART NO.	DESCRIPTION	QTY.	REMARKS
1	2H.075.06.0.00	STICKER KIRLOSKAR GREEN POWER IDEAS 420X450MM	3	
*2	2H.075.01.0.00	KIRLOSKAR GREEN BRAND STICKER 5M LENGTH.	4	NOT ILLUSTRATED
3	02.402.03.0.00	DANGER HIGH VOLTAGE STICKER	1	
4	38.065.67.0.00	STICKER FOR "FUEL"	1	
5	38.065.62.0.00	STICKER FOR FIRE (NO SMOKING)	1	
6	38.065.05.0.00	STICKER FOR "DIESEL DRAIN"	1	
7	38.065.09.0.00	STICKER FOR "WATER DRAIN"	1	
8	38.065.08.0.00	STICKER FOR "LUB OIL DRAIN"	1	
9	38.065.13.0.00	STICKER FOR "EARTHING"	1	
10	38.065.04.0.00	STICKER FOR "EMERGENCY STOP"	1	
11	38.065.63.0.00	STICKER FOR "RADIATOR"	2	
12	02.353.04.0.00	INSTRUCTION STICKER (FOR GENSET)	1	
13	2H.181.24.0.00	STICKER FOR LIFTING INSTRUCTION	2	
*14	38.065.65.0.00	STICKER FOR "REFER MANUAL"	1	NOT ILLUSTRATED

TITLE: - SET OF STICKERS FOR DV8, DV10 & DV12	**GROUP:** - DV0.178.3

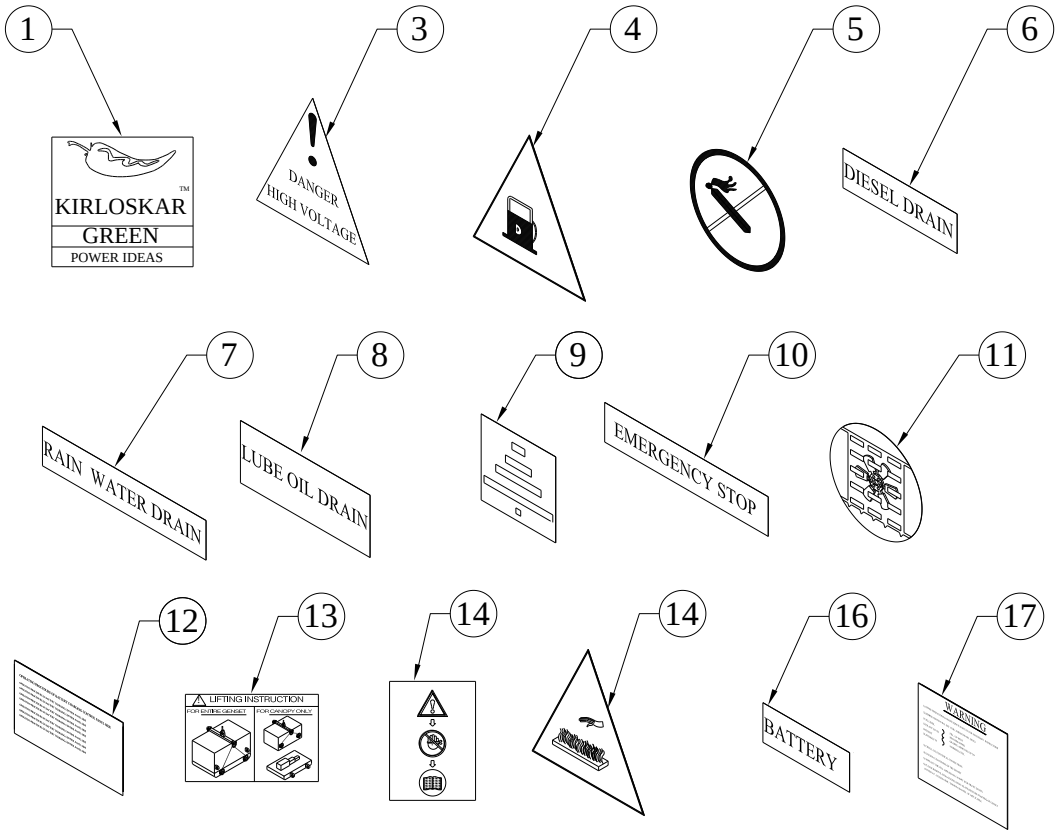

SR.NO.	PART NO.	DESCRIPTION	QTY.	REMARKS
15	38.065.66.0.00	STICKER FOR "HOT AIR"	1	
16	38.065.70.0.00	STICKER FOR "BATTERY"	1	
17	38.065.71.0.00	WARNING STICKER	1	

TITLE: - STAMFORD ALTERNATOR 500 KVA, 380V, 3PH., 60Hz, HCI54D FRAME, SAE1/14" 12LEAD CONNECTION	**GROUP: -** DV0.097

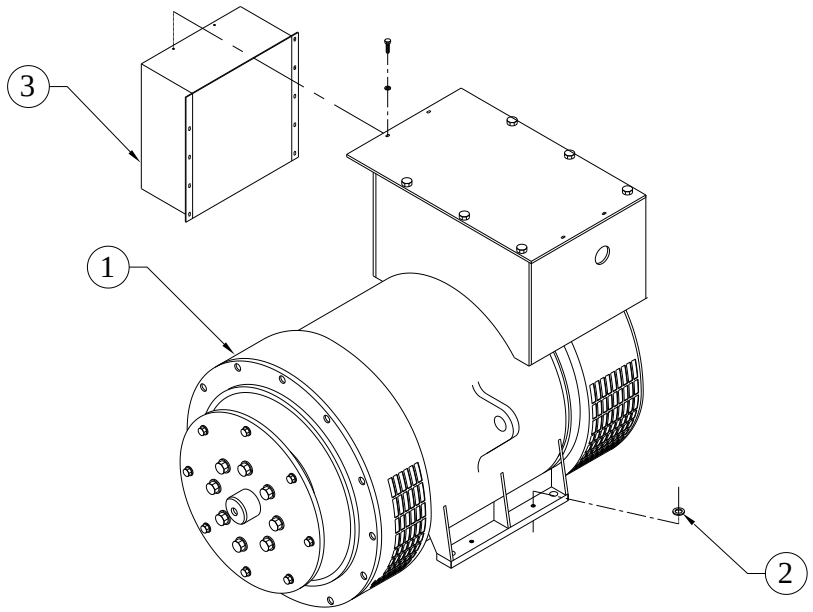

SR.NO.	PART NO.	DESCRIPTION	QTY.	REMARKS
1	DV0.097.01.0.00	STAMFORD ALTERNATOR 500 KVA, 380V, 3PH., 60Hz, HCI54D FRAME, SAE1/14" 12LEAD CONNECTION	1	
2	KV8.501.02.0.00	SPECIAL WASHER FOR ALTERNATOR MOUNTING ID 18 / OD 45 / 8 MM THICK	4	
3	KV0.501.06.0.00	ALTERNATOR TERMINAL BOX FOR 500 KVA SILENT SET	1	

TITLE: - STARTER	**GROUP:** - DV0.027

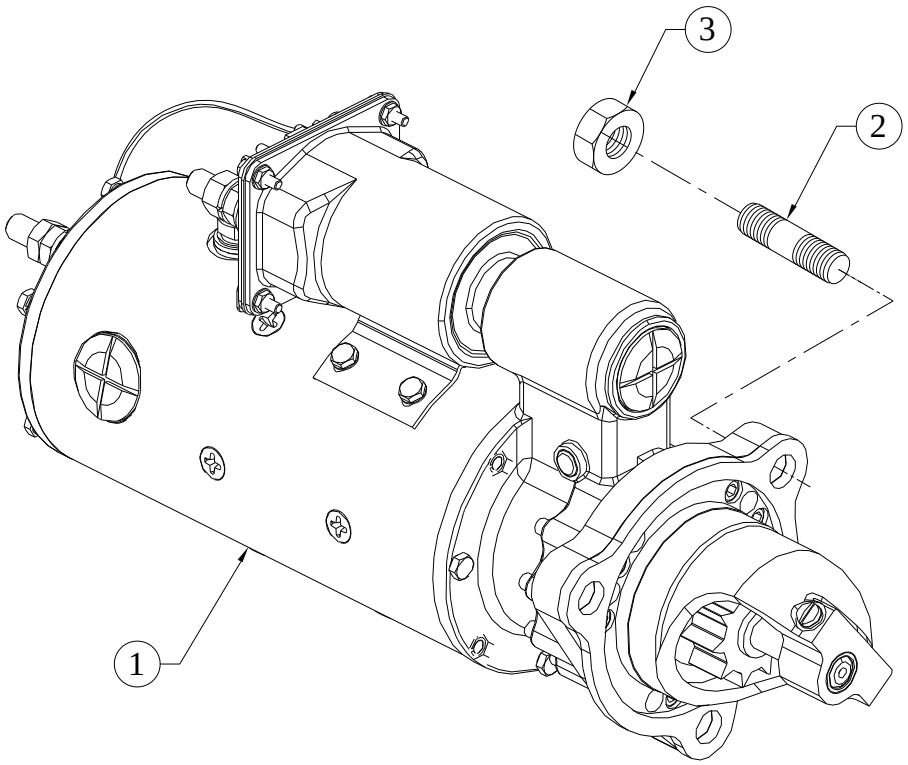

SR.NO.	PART NO.	DESCRIPTION	QTY.	REMARKS
1	DV0.027.11.0.00	STARTER (DELCO REMY 50MT)	1	
2	DV0.027.03.0.00	SPECIAL STUD (FOR STARTER)	3	
3	4H.781.13.0.00	NYLOCK NUT FOR JCB LOGING (M14X 2)	3	

TITLE: - STAY PLATE FOR RADIATOR	**GROUP: -** DV0.031.07

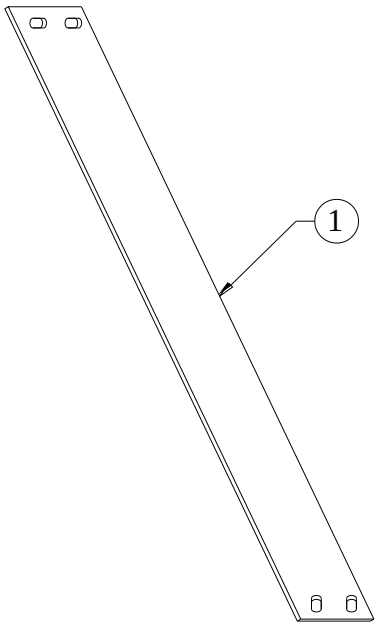

SR.NO.	PART NO.	DESCRIPTION	QTY.	REMARKS
1	DV0.031.07.0.00	STAY PLATE FOR RADIATOR	2	

TITLE: - STICKER FOR "EARTHING"	**GROUP: -** 38.065.13

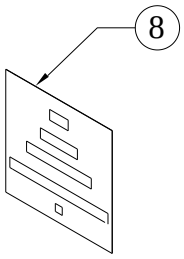

SR.NO.	PART NO.	DESCRIPTION	QTY.	REMARKS
1	38.065.13.0.00	STICKER FOR "EARTHING"	1	

TITLE: - STICKER FOR "KG500WS"	**GROUP:** - 02.710.74

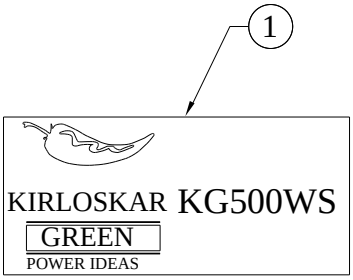

SR.NO.	PART NO.	DESCRIPTION	QTY.	REMARKS
1	02.710.74.0.00	STICKER FOR "KG500WS"	1	

TITLE: - STICKER FOR "START"	**GROUP:** - 38.065.11

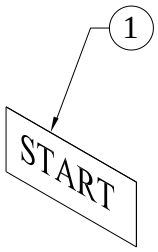

SR.NO.	PART NO.	DESCRIPTION	QTY.	REMARKS
1	38.065.11.0.00	STICKER FOR "START"	1	

TITLE: - STICKER FOR "STOP"	**GROUP: -** 38.065.07

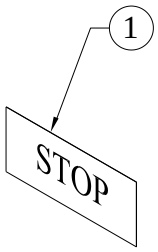

SR.NO.	PART NO.	DESCRIPTION	QTY.	REMARKS
1	38.065.07.0.00	STICKER FOR "STOP"	1	

TITLE: - SUCTION TUBE	**GROUP:** - DV0.043

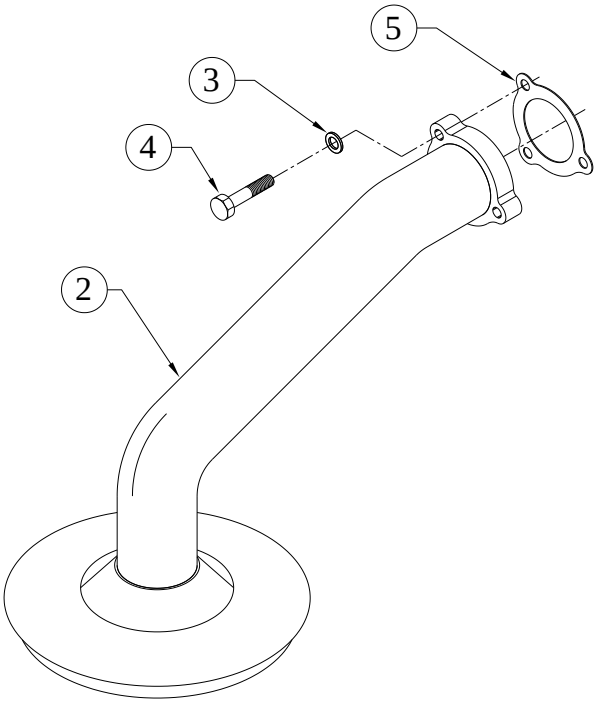

SR.NO.	PART NO.	DESCRIPTION	QTY.	REMARKS
*1	DV0.043.20.0.00	SUCTION TUBE ASM	1	CONSISTING OF SR. NO. 2 TO 5
2	DV0.043.10.0.00	SUCTION TUBE (SUB ASSLY)	1	
3	50.506.08.000.	PLAIN MACHINED WASHER - M8	3	
4	50.002.08.035.	SET BOLT - M8X1.25X35 - 8.8	3	
5	DV0.043.05.0.00	JOINT (FOR SUCTION TUBE FLANGE)	1	

TITLE: - SUPRABHA BAG DIMN (L x W x H) 7200 x 2400 x 2700	**GROUP: -** 2H.450.44

SR.NO.	PART NO.	DESCRIPTION	QTY.	REMARKS
*1	2H.450.44.0.00	SUPRABHA BAG DIMN (L x W x H) 7200 x 2400 x 2700	1	NOT ILLUSTRATED NOT SUPPLID LOOSE

TITLE: - T BOLT CLAMP KLIPCO TB78 / JUPITOR (84 TO 92 DIA)	**GROUP: -** 4H.029.06

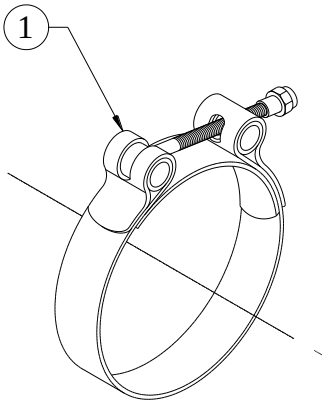

SR.NO.	PART NO.	DESCRIPTION	QTY.	REMARKS
1	4H.029.06.0.00	T BOLT CLAMP KLIPCO TB78 / JUPITOR (84 TO 92 DIA)	2	

TITLE: - TAPPET AND PUSH ROD TUBE	**GROUP:** - DV0.018

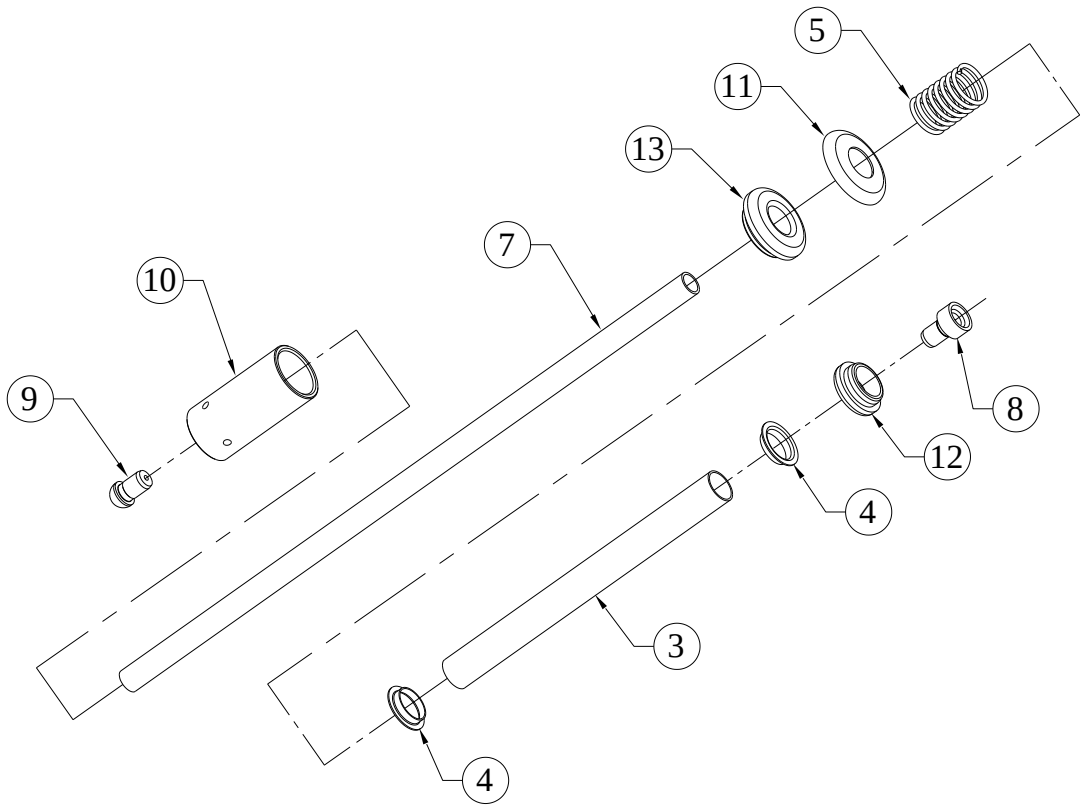

SR.NO.	PART NO.	DESCRIPTION	QTY.	REMARKS
*1	DV0.018.30.0.00	PUSH ROD TUBE & ROD	1	CONSISTING OF SR.NO. 2 TO 6
*2	DV0.018.20.0.00	ASSLY PUSH ROD COVER TUBE	1	CONSISTING OF SR.NO. 3 TO 5
3	DV0.018.05.0.00	PUSH ROD COVER TUBE	1	
4	34.011.03.0.00	COLLAR	2	
5	02.024.04.0.00	SPRING	2	
*6	DV0.018.10.0.00	PUSH ROD ASSEMBLY	1	CONSISTING OF SR.NO.7 TO 9
7	DV0.018.02.0.00	PUSH ROD	1	
8	DV0.018.03.0.00	PUSH ROD SOCKET	1	
9	DV0.018.04.0.00	PUSH ROD TOE	1	
10	DV0.018.01.0.00	TAPPET	1	
11	34.011.02.0.00	CUP FOR P R TUBE	1	
12	34.011.06.0.00	RUBBER BUSH (TOP)	1	
13	DV0.018.11.0.00	RUBBER BUSH (BOTTOM)	1	

TITLE: - THERMOSTAT HOUSING	**GROUP:** - DV0.015

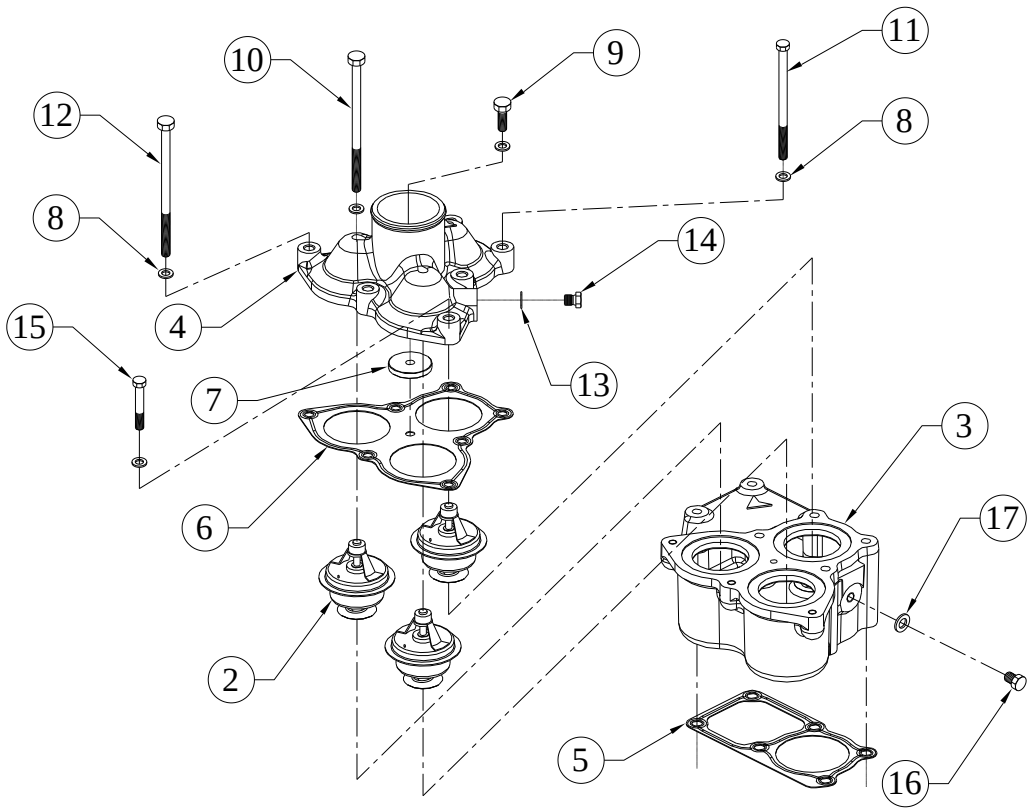

SR.NO.	PART NO.	DESCRIPTION	QTY.	REMARKS
*1	DV0.015.10.0.00	THERMOSTAT HOUSING ASSLY	1	CONSISTING OF SR. NO. 2 TO 17
2	DV0.015.01.0.00	THERMOSTAT ELEMENT	3	
3	DV0.015.02.0.00	THERMOSTAT HOUSING	1	
4	DV0.015.03.0.00	THERMOSTAT HOUSING COVER	1	
5	DV0.015.05.0.00	JOINT (FOR THERMOSTAT HOUSING)	1	
6	DV0.015.06.0.00	GASKET (FOR THERMOSTAT COVER)	1	
7	DV0.015.07.0.00	WASHER (FOR THERMOSTAT HOUSING ASSLY)	1	
8	50.506.08.000	PLAIN MACHINED WASHER - M8	10	
9	50.003.08.016	SET SCREW - M8X1.25X16 - 8.8	1	
10	50.002.08.125	SET BOLT - M8X1.25X125 - 8.8	1	
11	50.002.08.105	SET BOLT - M8X1.25X105 - 8.8	2	
12	50.002.08.130	HEXAGONAL HEADED BOLT - M8 X 130L	3	
13	50.508.08.000	COPPER WASHER (10X16)	1	

TITLE: - THERMOSTAT HOUSING	**GROUP:** - DV0.015

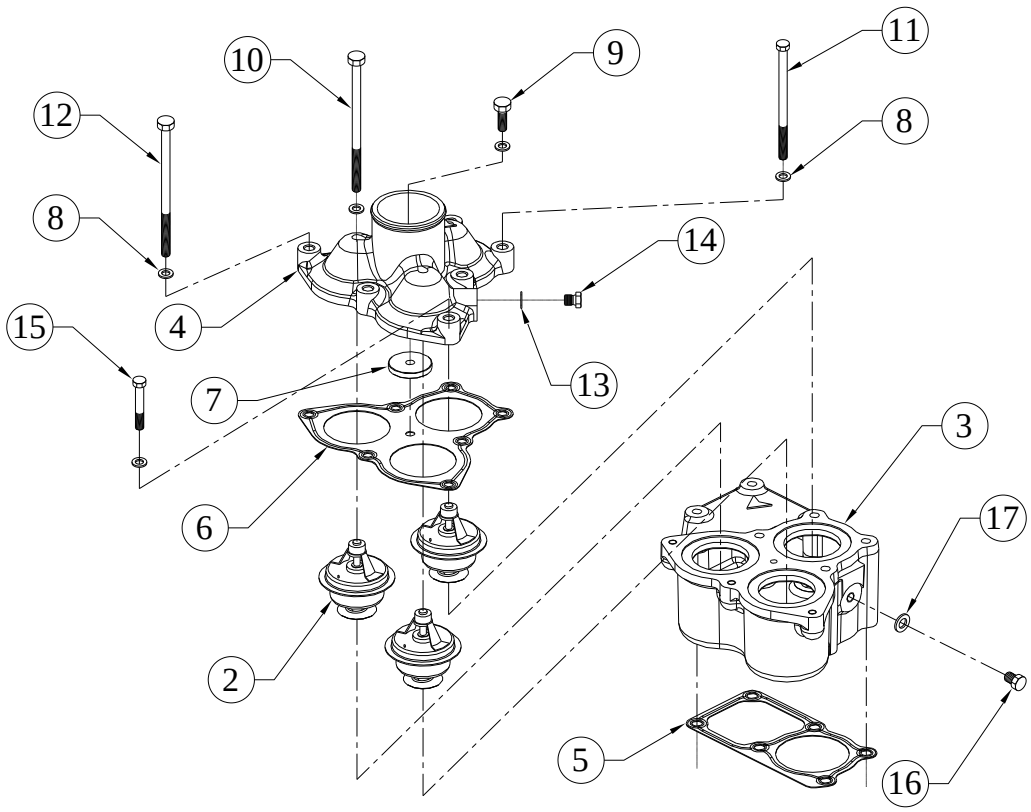

SR.NO.	PART NO.	DESCRIPTION	QTY.	REMARKS
14	34.001.35.0.00	PRECOATED PLUG (FOR OIL GALLERY)	1	
15	50.002.08.040	SET BOLT - M8X1.25X40 - 8.8	3	
16	50.602.14.000	PLUG (M14X1.5)	1	
17	50.508.12.000	COPPER WASHER (14X20)	1	

TITLE: - TORSIONAL VIBRATION DAMPER+ CRANK PULLEY	**GROUP: -** DV0.030

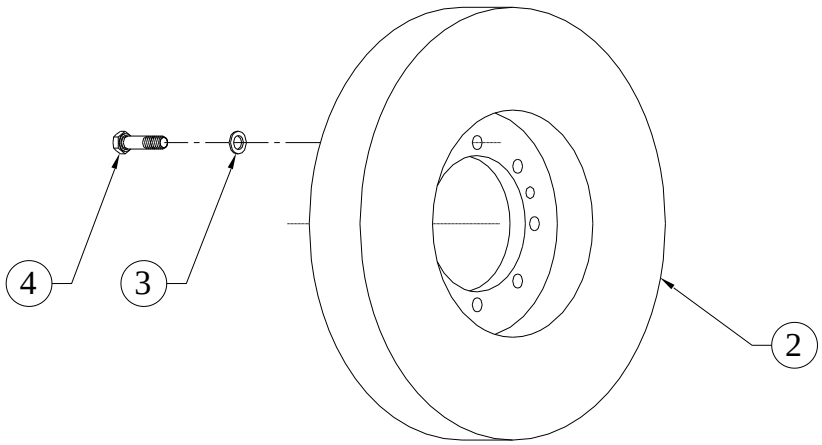

SR.NO.	PART NO.	DESCRIPTION	QTY.	REMARKS
*1	DV0.030.10.0.00	TORSIONAL VIBRATION DAMPER ASM	1	CONSISTING OF SR. NO. 2 TO 4
2	DV0.030.03.0.00	DAMPER (VISCOUS) HODEK MAKE S/F LONG COUPLED GENSET WITH LSC ALTERNATOR	1	
3	50.506.12.000.	PLAIN MACHINED WASHER - M12	8	
4	50.052.12.045.	SET BOLT-M12X45-10.9	8	

TITLE: - TURBOCHARGER AND MOUNTING	**GROUP:** - DV2.032

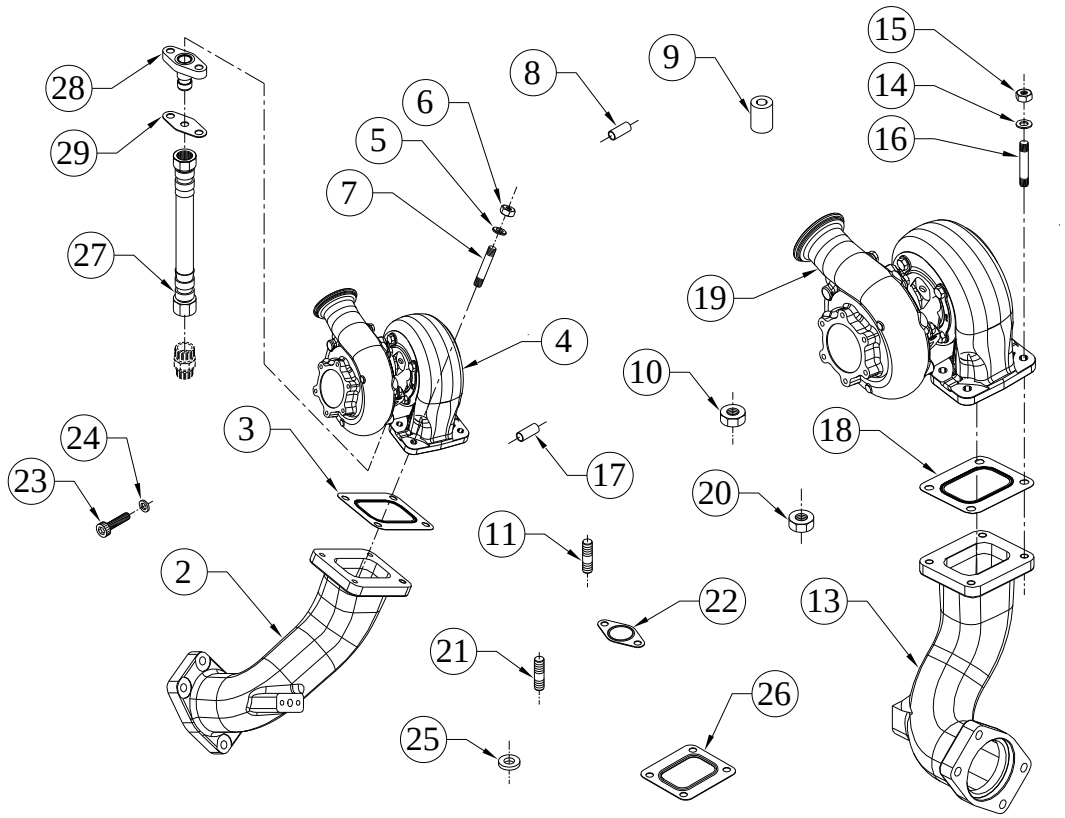

SR.NO.	PART NO.	DESCRIPTION	QTY.	REMARKS
*1	DV2.032.70.0.00	TURBO CHARGER ASSLY (LEFT SIDE)	1	CONSISTING OF SR. NO. 2 TO 11
2	DV0.032.19.0.00	TURBO ADAPTOR L.H. (FROM F.W. END)	1	
3	DV0.032.04.0.00	JOINT (BET.ADAPTOR AND TURBO)	1	
4	DV2.032.97.0.00	LEFT BANK TURBOCHARGER (VIEWED FROM FLYWHEEL) FOR DV12 ENGINE	1	
5	50.506.10.000.	PLAIN MACHINED WASHER - M10	8	
6	50.080.10.000.	STAINLESS STEEL NUT M10-AISI-304	8	
7	F6.366.02.0.00	STUD M10X1.5X65 (COPPER COATED)	4	
8	F6.177.13.0.00	SPACER SLEEVE(COPPER COATED)	4	
9	DV0.032.12.0.00	CLAMPING SPACER	8	
10	50.080.08.000.	NUT (SS) - M8x1.25	6	

TITLE: - TURBOCHARGER AND MOUNTING	**GROUP:** - DV2.032

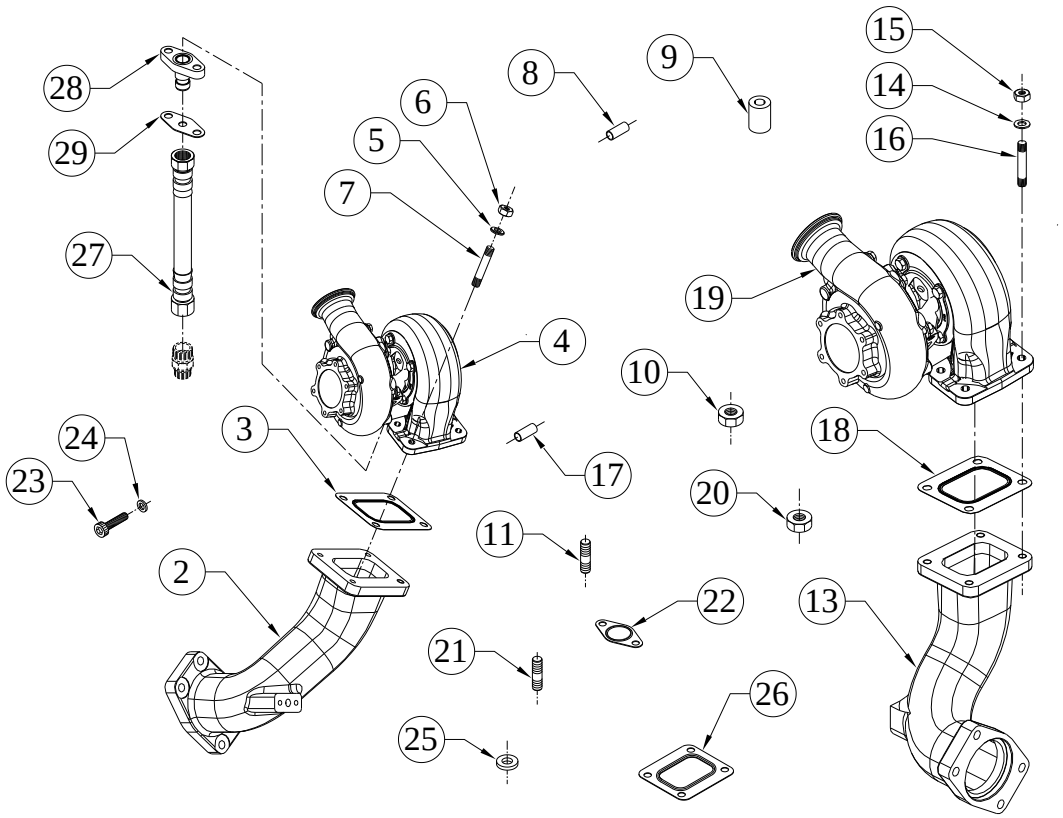

SR.NO.	PART NO.	DESCRIPTION	QTY.	REMARKS
11	F6.377.12.0.00	STUD M10X1.5X025 (COPPER COATED)	10	
*12	DV2.032.60.0.00	TURBO CHARGER ASSLY (R.H. SIDE)	1	CONSISTING OF SR. NO. 13 TO 21
13	DV0.032.18.0.00	TURBO ADAPTOR (R.H.) (FROM F.W. END)	1	
14	50.506.10.000.	PLAIN MACHINED WASHER - M10	8	
15	50.080.10.000.	STAINLESS STEEL NUT M10-AISI-304	8	
16	F6.366.02.0.00	STUD M10X1.5X65 (COPPER COATED)	4	
17	F6.177.13.0.00	SPACER SLEEVE(COPPER COATED)	4	
18	DV0.032.04.0.00	JOINT (BET.ADAPTOR AND TURBO)	1	
19	DV2.032.98.0.00	RIGHT BANK TURBOCHARGER (VIEWED FROM FLYWHEEL) FOR DV12 ENGINE	1	

TITLE: - TURBOCHARGER AND MOUNTING	**GROUP:** - DV2.032

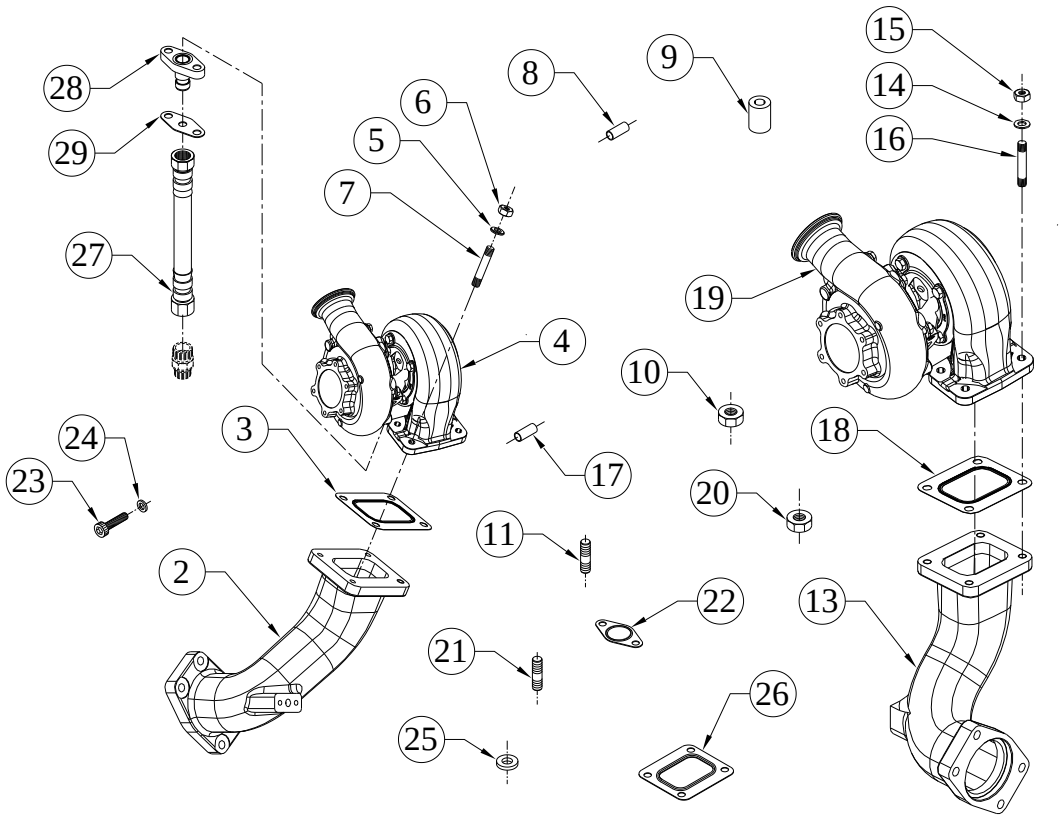

SR.NO.	PART NO.	DESCRIPTION	QTY.	REMARKS
20	50.080.08.000.	NUT (SS) - M8x1.25	6	
21	F6.377.12.0.00	STUD M10X1.5X025 (COPPER COATED)	10	
22	DV0.032.06.0.00	JOINT (FOR FLANGE) FOR T/C LUB OIL OUTLET PIPE	2	
23	50.011.08.025.	SOCKET HEAD SCREW - M8X1.25X25 - 8.8	1	
24	50.506.08.000.	PLAIN MACHINED WASHER - M8	4	
25	34.017.05.0.00	WASHER FOR FUEL PUMP GEAR.	4	
26	DV0.032.33.0.00	JOINT	2	
27	DV0.032.43.0.PR	TURBO DRAIN PIPE	2	
28	DV0.032.08.0.00	FLANGE WITH ADAPTOR (FOR TURBO DRAIN)	2	
29	4H.132.27.0.00	JOINT FOR ADAPTOR (TURBO SIDE)	2	

TITLE: - VENT PIPE FOR RADIATOR	**GROUP:** - DV0.071

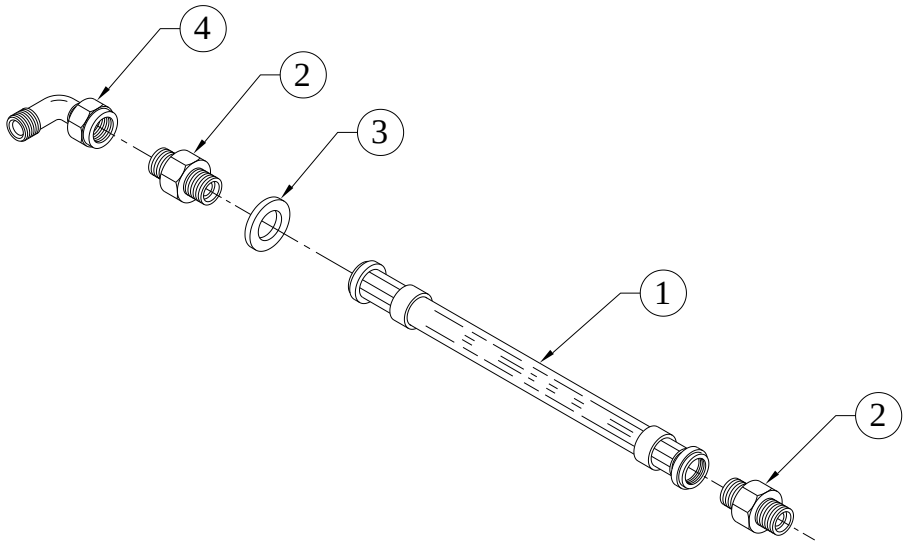

SR.NO.	PART NO.	DESCRIPTION	QTY.	REMARKS
1	DV0.071.01.0.00	VENT PIPE	1	
2	4H.486.01.0.00	ADAPTOR FOR FUEL INLET (BOTH END M14X1.5)	2	
3	50.508.12.000.	COPPER WASHER (14X20)	1	
4	DV0.071.02.0.00	ELBOW CONNECTION SUBASSEMBLY	1	

TITLE: - WATER OUT PIPE CLAMP ASSEMBLY	**GROUP:** - DV0.031.7

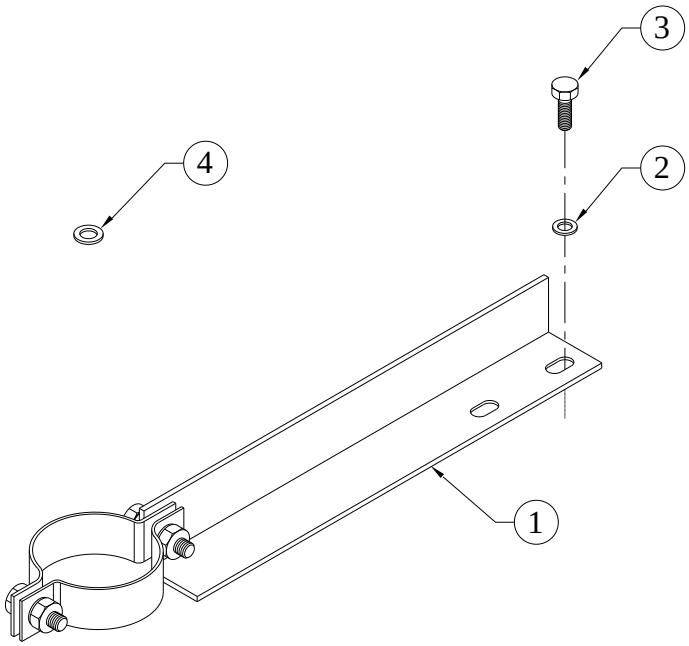

SR.NO.	PART NO.	DESCRIPTION	QTY.	REMARKS
1	DV0.031.80.0.00	CLAMP ASSEMBLY (FOR WATER OUTLET PIPE)	1	
2	50.506.08.000.	PLAIN MACHINED WASHER - M8	2	
3	50.003.08.025.	SET SCREW - M8X1.25X25 - 8.8	2	
4	50.548.08.000.	SPL.PLAIN M/CED WASHER	1	

TITLE: - WATER PUMP	**GROUP:** - DV0.016

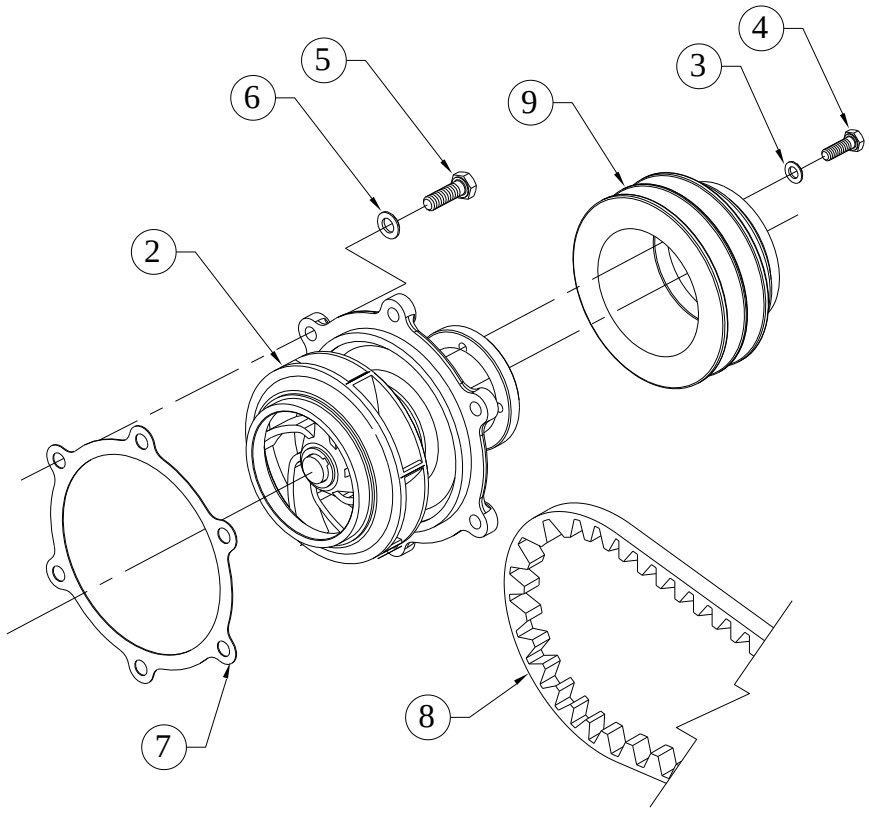

SR.NO.	PART NO.	DESCRIPTION	QTY.	REMARKS
*1	DV0.016.20.0.00	WATER PUMP ASSEMBLY WITH PULLEY	1	CONSISTING OF SR. NO. 2 TO 7
2	DV0.016.10.0.00	WATER PUMP ASSLY	1	
3	50.506.08.000.	PLAIN MACHINED WASHER - M8	4	
4	50.003.08.025.	SET SCREW - M8X1.25X25 - 8.8	4	
5	50.003.10.025.	SET SCREW - M10X1.5X25 - 8.8	6	
6	50.506.10.000.	PLAIN MACHINED WASHER - M10	7	
7	DV0.016.09.0.00	JOINT - BETWEEN WATER PUMP HSG AND HEADER .	1	
8	DV0.016.08.0.00	BELT V SECTION (BX 58- PITCH LENGTH 1520)	1	
9	DV0.016.21.0.00	WATER PUMP PULLEY (115 PCD)	1	

TITLE: - WIRING HARNESS TIE, 200MM LENGTH, IN BLACK COLOUR,	**GROUP: -** 02.1216.01

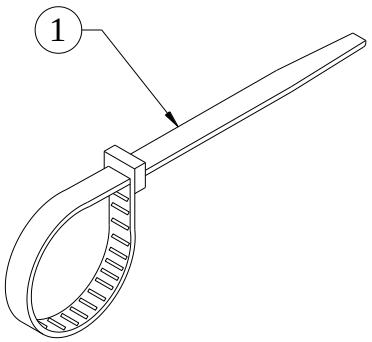

SR.NO.	PART NO.	DESCRIPTION	QTY.	REMARKS
1	02.1216.01.0.00	200MM LENGTH, IN BLACK COLOUR, WIRING HARNESS TIE	2	

TITLE: -SET OF JOINTS, COPPER WASHERS & 'O' RINGS (DV0.5060)	**GROUP: -**

SR.NO.	PART NO.	DESCRIPTION	QTY.	REMARKS
***1**	**DV0.066.61.0.00**	**SET OF JOINTS**	**1**	CONSISTING OF SR. NO.- 2 TO 39
*2	03.774.04.0.00	JOINT FOR COVER(AUX.L.O.SUMP)	4	
*3	08.021.02.0.00	JOINT FOR FEED PUMP	2	
*4	4H.039.02.0.00	JOINT FOR W.I.CONN. & THERMO.HSG.	1	
*5	4H.132.27.0.00	JOINT FOR ADAPTOR (TURBO SIDE)	2	
*6	DV0.007.11.0.00	CYLINDERHEAD GASKET (1.2 THK)	1	
*7	DV0.007.41.0.00	CYLINDER HEAD GASKET (0.85 THK)	1	
*8	DV0.007.42.0.00	CYLINDER HEAD GASKET (1 THK)	1	
*9	DV0.007.43.0.00	CYLINDER HEAD GASKET (1.15 THK)	1	
*10	DV0.009.05.0.00	JOINT FOR ROCKER COVER (METALLIC GASKET)	2	
*11	DV0.012.03.0.00	JOINT (FOR OIL SEAL HOUSING)	1	
*12	DV0.014.16.0.00	JOINT (FOR WATER PUMP SUCTION)	1	
*13	DV0.014.17.0.00	GASKET (LUB. OIL HEADER)	1	

TITLE: -SET OF JOINTS, COPPER WASHERS & 'O' RINGS (DV0.5060)	**GROUP: -**

SR.NO.	PART NO.	DESCRIPTION	QTY.	REMARKS
*14	DV0.014.18.0.00	JOINT FOR SUCTION PIPE ASSLY	1	
*15	DV0.014.51.0.00	JOINT FOR COOLER COVER (MODIFIED)	1	
*16	DV0.015.05.0.00	JOINT (FOR THERMOSTAT HOUSING)	1	
*17	DV0.015.06.0.00	GASKET (FOR THERMOSTAT COVER)	1	
*18	DV0.016.09.0.00	JOINT - BETWEEN WATER PUMP HSG AND HEADER.	1	
*19	DV0.023.02.0.00	JOINT (MAIN AIR PIPE TO INLET MANIFOLD)	4	
*20	DV0.023.03.0.00	JOINT (BET.INLET MANIFOLD AND CYL.HEAD)	5	
*21	DV0.024.06.0.00	JOINT (BET.EXH.MANI. & ADAPTOR)	2	
*22	DV0.024.08.0.00	JOINT (BET.EXH. MANI. AND EXPA.BELLOW)	4	
*23	DV0.024.22.0.00	JOINT BETWEEN EXHAUST MANIFOLD & CYLINDER HEAD	10	
*24	DV0.025.03.0.00	JOINT FOR GEAR CASING	1	

TITLE: -SET OF JOINTS, COPPER WASHERS & 'O' RINGS (DV0.5060)	**GROUP: -**

SR.NO.	PART NO.	DESCRIPTION	QTY.	REMARKS
*25	DV0.032.04.0.00	JOINT (BET.ADAPTOR & TURBO)	2	
*26	DV0.032.06.0.00	JOINT (FOR FLANGE) FOR T/C LUB OIL OUTLET PIPE	2	
*27	DV0.032.33.0.00	JOINT	2	
*28	DV0.033.11.0.00	JOINT (BETWEEN MAIN AIR PIPE HORIZONTAL & VERTICAL)	1	
*29	DV0.033.13.0.00	JOINT (BET.MAIN AIR PIPE HOR+VER)	1	
*30	DV0.033.14.0.00	JOINT (BET.BEND TO AIR PIPE)	4	
*31	DV0.040.98.0.00	JOINT FOR GOVERNOR MOUNTING PLATE	1	
*32	DV0.041.04.0.00	GASKET (JOINT BETWEEN CENT-RIFUGAL ADAPTOR AND FILTER)	2	
*33	DV0.041.07.0.00	GASKET BETWEEN OIL SUMP AND CENTRIFUGE ADAPTOR	1	
*34	DV0.042.03.0.00	JOINT (FOR DELIVERY TUBE FLANGE)	1	
*35	DV0.043.05.0.00	JOINT (FOR SUCTION TUBE FLANGE)	1	

TITLE: -SET OF JOINTS, COPPER WASHERS & 'O' RINGS (DV0.5060)	**GROUP: -**

SR.NO.	PART NO.	DESCRIPTION	QTY.	REMARKS
*36	DV0.046.04.0.00	JOINT (BET. BREATER PLATE & ADAPTER)	1	
*37	DV0.064.01.0.00	JOINT FOR DV10 TURBO	4	
*38	F6.201.02.0.00	JOINT FOR EXHAUST SILENCER	10	
*39	F6.503.02.0.00	S.S.JOINT(4")	12	
***40**	**DV0.066.62.0.00**	**SET OF COPPER WASHERS**	**1**	CONSISTING OF SR. NO.- 41 TO 57
*41	34.032.14.0.00	ASBESTOS WASHER	1	
*42	50.508.04.000	COPPER WASHER (6X10)	9	
*43	50.508.05.000	COPPER WASHER (8X12)	12	
*44	50.508.07.000	COPPER WASHER (10X14)	2	
*45	50.508.08.000	COPPER WASHER (10X16)	8	
*46	50.508.11.000	COPPER WASHER (14X18)	3	
*47	50.508.12.000	COPPER WASHER (14X20)	42	
*48	50.508.12.000	COPPER WASHER (14X20)	1	
*49	50.508.13.000	COPPER WASHER (16X20)	2	
*50	50.508.14.000	COPPER WASHER (16X22)	3	
*51	50.508.16.000	COPPER WASHER (18X22)	6	

TITLE: -SET OF JOINTS, COPPER WASHERS & 'O' RINGS (DV0.5060)	**GROUP: -**

SR.NO.	PART NO.	DESCRIPTION	QTY.	REMARKS
*52	50.508.18.000	COPPER WASHER (20X24)	8	
*53	50.508.19.000	COPPER WASHER (20X26)	2	
*54	50.508.27.000	COPPER WASHER (24X29)	3	
*55	50.508.32.000	COPPER WASHER (28X33)	3	
*56	50.508.34.000	COPPER WASHER (30X36)	4	
*57	50.508.35.000	COPPER WASHER (30X38)	2	
***58**	**DV0.066.63.0.00**	**SET OF 'O' RING**	**1**	CONSISTING OF SR. NO.- 59 TO 71
*59	DV0.002.02.0.00	O RING (FOR CY LINER)	3	
*60	DV0.014.12.0.00	O RING (38 DIA)FOR L.O. HEADER	3	
*61	DV0.014.13.0.00	O RING (58 DIA) FOR L.O. HEADER	2	
*62	DV0.014.14.0.00	O RING (67 DIA) FOR L.O. HEADER	2	
*63	DV0.014.23.0.00	O RING (DIA.29) FOR ELEMENT OIL COOLER	6	
*64	DV0.017.07.0.00	O RING FOR DIPSTICK PLUG	2	
*65	DV0.033.38.0.00	O RING (FOR COMPRESSOR OUT PIPE)	2	
*66	DV0.040.09.0.00	O RING FOR OIL SEAL HOUSING	1	

TITLE: -SET OF JOINTS, COPPER WASHERS & 'O' RINGS (DV0.5060)	**GROUP: -**

SR.NO.	PART NO.	DESCRIPTION	QTY.	REMARKS
*67	DV0.041.17.0.00	`O' RING FOR OIL FILLING PIPE	2	
*68	DV0.042.05.0.00	O RING (DIA. 36) FOR LUB.OIL DELIVERY TUBE	2	
*69	DV0.046.03.0.00	O RING FOR BREATHER PLATE	1	
*70	DV0.046.09.0.00	`O' RING	2	
*71	F6.024.47.0.00	O - RING FOR DRAIN PLUG	4	

TITLE: - SET OF BEARINGS (DV0.5060)

SR.NO.	PART NO.	DESCRIPTION	QTY.	REMARKS
		SET OF MAIN BEARINGS		
*1	F6.192.07.0.00	BALL BEARING (80 X 35 X 21) FAG 6307-2RSR	2	
*2	DV0.040.04.0.00	DRIVE END BEARING (SKF No. NU2207 ECP)	1	
*3	DV0.040.05.0.00	GOVERNOR END BEARING (SKF NO. 21306 CC)	1	
*4	DV0.040.06.0.00	INTERMEDIATE SUPPORT BEARING FOR CAM SHAFT	6	
*5	DV0.001.12.0.00	MAIN BEARING BOTTOM (STD)	6	
*6	DV0.001.11.0.00	MAIN BEARING TOP (STD)	6	
		SET OF CONROD BEARINGS		
*7	DV0.005.06.0.00	BIG END BEARING (STD)	2	
		SET OF THRUST WASHERS		
*8	2H.038.02.0.00	THRUST WASHER	2	
*9	DV0.011.04.0.00	THRUST WASHER (3.9MM THICK)	2	
*10	DV0.001.14.0.00	THRUST WASHER (BOTTOM)	2	
*11	DV0.010.04.0.00	THRUST WASHER (FOR INTERMEDIATE GEAR SUPPORT)	2	
*12	DV0.010.06.0.00	THRUST WASHER (FOR INTERMEDIATE GEAR SUPPORT) 4.2 mm THICK	2	
*13	DV0.001.13.0.00	THRUST WASHER (TOP)	2	